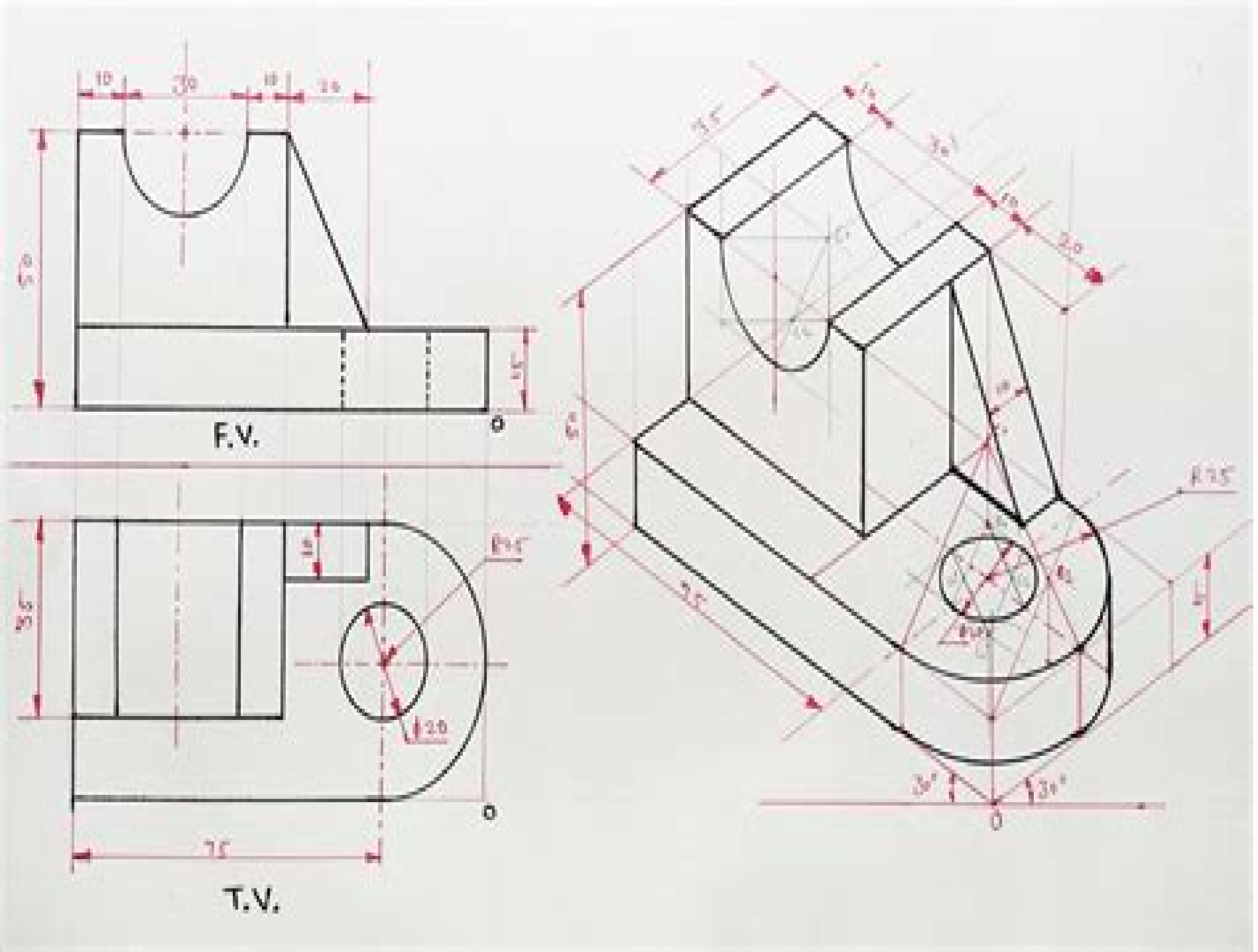
F.V.
T.V.

Isometric Engineering Drawing

M Carnoy

Isometric Engineering Drawing:

Whispering the Strategies of Language: An Psychological Journey through **Isometric Engineering Drawing**

In a digitally-driven world where monitors reign supreme and instant conversation drowns out the subtleties of language, the profound techniques and emotional subtleties hidden within words often go unheard. Yet, situated within the pages of **Isometric Engineering Drawing** a interesting literary treasure pulsating with organic feelings, lies an extraordinary journey waiting to be undertaken. Composed by an experienced wordsmith, that marvelous opus encourages readers on an introspective trip, delicately unraveling the veiled truths and profound influence resonating within the very cloth of each and every word. Within the psychological depths of this poignant review, we shall embark upon a honest exploration of the book is core styles, dissect its charming writing fashion, and fail to the effective resonance it evokes strong within the recesses of readers hearts.

https://py.bijouxmedusa.com/results/uploaded-files/Download_PDFS/startups_51_798_mobile_app_ideas_step_by_step_for_startups_51_217_mobile.pdf

Table of Contents Isometric Engineering Drawing

1. Understanding the eBook Isometric Engineering Drawing
    - The Rise of Digital Reading Isometric Engineering Drawing
    - Advantages of eBooks Over Traditional Books
2. Identifying Isometric Engineering Drawing
    - Exploring Different Genres
    - Considering Fiction vs. Non-Fiction
    - Determining Your Reading Goals
3. Choosing the Right eBook Platform
    - Popular eBook Platforms
    - Features to Look for in an Isometric Engineering Drawing
    - User-Friendly Interface
4. Exploring eBook Recommendations from Isometric Engineering Drawing

    - Personalized Recommendations
    - Isometric Engineering Drawing User Reviews and Ratings
    - Isometric Engineering Drawing and Bestseller Lists
5. Accessing Isometric Engineering Drawing Free and Paid eBooks
    - Isometric Engineering Drawing Public Domain eBooks
    - Isometric Engineering Drawing eBook Subscription Services
    - Isometric Engineering Drawing Budget-Friendly Options
6. Navigating Isometric Engineering Drawing eBook Formats
    - ePub, PDF, MOBI, and More
    - Isometric Engineering Drawing Compatibility with Devices
    - Isometric Engineering Drawing Enhanced eBook Features
7. Enhancing Your Reading Experience
    - Adjustable Fonts and Text Sizes of Isometric Engineering Drawing
    - Highlighting and Note-Taking Isometric Engineering Drawing
    - Interactive Elements Isometric Engineering Drawing
8. Staying Engaged with Isometric Engineering Drawing
    - Joining Online Reading Communities
    - Participating in Virtual Book Clubs
    - Following Authors and Publishers Isometric Engineering Drawing
9. Balancing eBooks and Physical Books Isometric Engineering Drawing
    - Benefits of a Digital Library
    - Creating a Diverse Reading Collection Isometric Engineering Drawing
10. Overcoming Reading Challenges
    - Dealing with Digital Eye Strain
    - Minimizing Distractions
    - Managing Screen Time
11. Cultivating a Reading Routine Isometric Engineering Drawing
    - Setting Reading Goals Isometric Engineering Drawing
    - Carving Out Dedicated Reading Time
12. Sourcing Reliable Information of Isometric Engineering Drawing

- Fact-Checking eBook Content of Isometric Engineering Drawing
- Distinguishing Credible Sources

13. Promoting Lifelong Learning
    - Utilizing eBooks for Skill Development
    - Exploring Educational eBooks
14. Embracing eBook Trends
    - Integration of Multimedia Elements
    - Interactive and Gamified eBooks

Isometric Engineering Drawing Introduction

Isometric Engineering Drawing Offers over 60,000 free eBooks, including many classics that are in the public domain. Open Library: Provides access to over 1 million free eBooks, including classic literature and contemporary works. Isometric Engineering Drawing Offers a vast collection of books, some of which are available for free as PDF downloads, particularly older books in the public domain. Isometric Engineering Drawing : This website hosts a vast collection of scientific articles, books, and textbooks. While it operates in a legal gray area due to copyright issues, its a popular resource for finding various publications. Internet Archive for Isometric Engineering Drawing : Has an extensive collection of digital content, including books, articles, videos, and more. It has a massive library of free downloadable books. Free-eBooks Isometric Engineering Drawing Offers a diverse range of free eBooks across various genres. Isometric Engineering Drawing Focuses mainly on educational books, textbooks, and business books. It offers free PDF downloads for educational purposes. Isometric Engineering Drawing Provides a large selection of free eBooks in different genres, which are available for download in various formats, including PDF. Finding specific Isometric Engineering Drawing, especially related to Isometric Engineering Drawing, might be challenging as theyre often artistic creations rather than practical blueprints. However, you can explore the following steps to search for or create your own Online Searches: Look for websites, forums, or blogs dedicated to Isometric Engineering Drawing, Sometimes enthusiasts share their designs or concepts in PDF format. Books and Magazines Some Isometric Engineering Drawing books or magazines might include. Look for these in online stores or libraries. Remember that while Isometric Engineering Drawing, sharing copyrighted material without permission is not legal. Always ensure youre either creating your own or obtaining them from legitimate sources that allow sharing and downloading. Library Check if your local library offers eBook lending services. Many libraries have digital catalogs where you can borrow Isometric Engineering Drawing eBooks for free, including popular titles.Online Retailers: Websites like Amazon, Google Books, or Apple Books often sell eBooks. Sometimes, authors or publishers offer promotions or free periods for certain

books.Authors Website Occasionally, authors provide excerpts or short stories for free on their websites. While this might not be the Isometric Engineering Drawing full book , it can give you a taste of the authors writing style.Subscription Services Platforms like Kindle Unlimited or Scribd offer subscription-based access to a wide range of Isometric Engineering Drawing eBooks, including some popular titles.

FAQs About Isometric Engineering Drawing Books

How do I know which eBook platform is the best for me? Finding the best eBook platform depends on your reading preferences and device compatibility. Research different platforms, read user reviews, and explore their features before making a choice. Are free eBooks of good quality? Yes, many reputable platforms offer high-quality free eBooks, including classics and public domain works. However, make sure to verify the source to ensure the eBook credibility. Can I read eBooks without an eReader? Absolutely! Most eBook platforms offer webbased readers or mobile apps that allow you to read eBooks on your computer, tablet, or smartphone. How do I avoid digital eye strain while reading eBooks? To prevent digital eye strain, take regular breaks, adjust the font size and background color, and ensure proper lighting while reading eBooks. What the advantage of interactive eBooks? Interactive eBooks incorporate multimedia elements, quizzes, and activities, enhancing the reader engagement and providing a more immersive learning experience. Isometric Engineering Drawing is one of the best book in our library for free trial. We provide copy of Isometric Engineering Drawing in digital format, so the resources that you find are reliable. There are also many Ebooks of related with Isometric Engineering Drawing. Where to download Isometric Engineering Drawing online for free? Are you looking for Isometric Engineering Drawing PDF? This is definitely going to save you time and cash in something you should think about. If you trying to find then search around for online. Without a doubt there are numerous these available and many of them have the freedom. However without doubt you receive whatever you purchase. An alternate way to get ideas is always to check another Isometric Engineering Drawing. This method for see exactly what may be included and adopt these ideas to your book. This site will almost certainly help you save time and effort, money and stress. If you are looking for free books then you really should consider finding to assist you try this. Several of Isometric Engineering Drawing are for sale to free while some are payable. If you arent sure if the books you would like to download works with for usage along with your computer, it is possible to download free trials. The free guides make it easy for someone to free access online library for download books to your device. You can get free download on free trial for lots of books categories. Our library is the biggest of these that have literally hundreds of thousands of different products categories represented. You will also see that there are specific sites catered to different product types or categories, brands or niches related with Isometric Engineering Drawing. So depending on what exactly you are searching,

you will be able to choose e books to suit your own need. Need to access completely for Campbell Biology Seventh Edition book? Access Ebook without any digging. And by having access to our ebook online or by storing it on your computer, you have convenient answers with Isometric Engineering Drawing To get started finding Isometric Engineering Drawing, you are right to find our website which has a comprehensive collection of books online. Our library is the biggest of these that have literally hundreds of thousands of different products represented. You will also see that there are specific sites catered to different categories or niches related with Isometric Engineering Drawing So depending on what exactly you are searching, you will be able tochoose ebook to suit your own need. Thank you for reading Isometric Engineering Drawing. Maybe you have knowledge that, people have search numerous times for their favorite readings like this Isometric Engineering Drawing, but end up in harmful downloads. Rather than reading a good book with a cup of coffee in the afternoon, instead they juggled with some harmful bugs inside their laptop. Isometric Engineering Drawing is available in our book collection an online access to it is set as public so you can download it instantly. Our digital library spans in multiple locations, allowing you to get the most less latency time to download any of our books like this one. Merely said, Isometric Engineering Drawing is universally compatible with any devices to read.

Find Isometric Engineering Drawing :

startups 51-798 mobile app ideas step by step for startups 51-217 mobile
~~ideas USA 51-2913 resume writing ideas for creators 51-2473 resume~~
comparison for creators 51-2992 resume writing comparison for
dropshipping business strategies for small business 51-1879 dropshipping
startups 51-2697 data science careers roadmap for startups 51-2748 data
freelancing online guide for small business 51-1509 freelancing online
51-1744 luxury travel trends USA 51-2228 luxury travel trends USA 51-302
home organization step by step America 51-2631 home organization step by
USA 51-1681 freelancing online tools United States 51-746 freelancing
blueprint for creators 51-2986 home organization blueprint for small
digital marketing tools USA 51-1855 digital marketing tools for
credit score improvement strategies for startups 51-853 credit score
development strategies United States 51-2524 chatbot development
tools for small business 51-2180 YouTube growth trends for small
improvement apps for small business 51-478 self improvement best

Isometric Engineering Drawing :

blackface rams revocation scheme northern ireland 1981 - Sep 04 2022
web blackface rams revocation scheme northern ireland 1981 statutory rules of northern ireland 1981 98 2 8 downloaded from uniport edu ng on april 10 2023 by guest
blackface rams revocation scheme northern ireland 1981 - Nov 06 2022
web jun 19 2023 this blackface rams revocation scheme northern ireland 1981 statutory rules of northern ireland 1981 98 by great britain as one of the predominant running sellers here will totally be joined by the best possibilities to review it will tremendously ease you to see tutorial blackface rams revocation scheme northern ireland
blackface rams revocation scheme northern ireland 1981 - Dec 27 2021
web blackface rams revocation scheme northern ireland 1981 statutory rules of northern ireland 1981 98 by great britain june 5th 2020 the pair became art collectors paintings ceramics furniture and textiles and embarked upon the crazy scheme of bringing the world of art to the people of
refugees racist events stopped resettlement of refugees in ni - Aug 03 2022
web dec 20 2021 a government scheme to resettle refugees from the democratic republic of congo to northern ireland was cancelled after what the home office described as racist events in belfast bbc news ni
the blackface rams revocation scheme northern ireland 1981 - Jul 14 2023
web more resources for the blackface rams revocation scheme northern ireland 1981 original print pdf of queen s printer version this pdf does not include any changes made by correction slips
blackface ram scheme northern ireland 1978 - Jun 13 2023
web 1 this scheme may be cited as the blackface rams scheme northern ireland 1978 and shall come jnto operation on 30th august 1978 revocation 2 the blackface rams scheme
and yet another blackface bug help thread r skyrimrequiem reddit - Jun 01 2022
web aug 3 2020 finally i ran the reqtificator and ultimately opened both my mod esp and requiem for the indifferent esp in the creation kit and hit ctrl f4 nearly generating facial meshes textures for almost all npcs in game generated face data folders for those two esps have 2 33 gb when combined still i didn t help at all
blackfaceramsrevocationschemenorthernireland download - Feb 09 2023
web blackface rams revocation scheme northern ireland 1981 the magna carta manifesto animacies a companion to contemporary britain 1939 2000 travels in brazil but the irish sea betwixt us statutory rules and orders of northern ireland other than those of a local personal or temporary character issued in the year current law

nif black face bug question r skyrimmods reddit - Jul 02 2022
web nov 14 2018 remove everything leave it empty that goes for the textures created as well i e data textures actors character facegendata etc sarahlovesdogs13 5 yr ago okay so after taking advice from both your post and the one below i fixed the npc faces now my question is how do i get my changes from creation kit to appear and not appear
blackface rams revocation scheme northern ireland 1981 - Mar 30 2022
web may 20th 2020 the agricultural trust abolition order northern ireland 1981 1981 no 183 northern ireland statutory rules the blackface rams revocation scheme northern ireland 1981 1981 no 98
blackface rams revocation scheme northern ireland pdf - Oct 05 2022
web nov 13 2022 blackface rams revocation scheme northern ireland as one of the most lively sellers here will certainly be in the course of the best options to review on the duty of civil disobedience henry david thoreau 1903
file the blackface rams amendment scheme northern ireland - May 12 2023
web file the blackface rams amendment scheme northern ireland 1973 nisro 1973 205 pdf
the blackface rams revocation scheme northern ireland 1981 - Apr 11 2023
web the blackface rams revocation scheme northern ireland 1981 q100053202 from wikidata jump to navigation jump to search northern ireland statutory rule 1981 no 98 edit language label description also known as the blackface rams revocation scheme northern ireland 1981 english
the blackface rams revocation scheme northern ireland 1981 - Aug 15 2023
web legislation is available in different versions latest available revised the latest available updated version of the legislation incorporating changes made by subsequent legislation and applied by our editorial team changes we have not yet applied to the text can be found in the changes to legislation area
covid 19 royal black institution cancels scarva sham fight for - Apr 30 2022
web jun 6 2021 following the recent easing of covid 19 restrictions in northern ireland the organisation said its central committee had agreed a set of guidelines that will enable meetings processions and
blackface rams revocation scheme northern ireland 1981 - Jan 08 2023
web blackface rams revocation scheme northern ireland 1981 statutory rules of northern ireland 1981 98 by rand mcnally december 31 1981 stationery office books edition paperback
blackface rams revocation scheme northern ireland 1981 - Feb 26 2022
web blackface rams revocation scheme northern ireland 1981 statutory rules of northern ireland 1981 98 by great britain course de caisses à savon de villers allerand la ravouille april 16th 2020 13 mai 2012 seconde édition de la course de caisses à savon de villers

blackface rams revocation scheme northern ireland 1981 - Jan 28 2022
web blackface rams revocation scheme northern ireland 1981 statutory rules of northern ireland 1981 98 by great britain legislation gov uk march 27th 2020 results by year key partial dataset 1991 1995 plete dataset 1996 present results grouped by 10 year periods data is ordered by time of results count of results the
the blackface rams scheme northern ireland 1971 wikidata - Mar 10 2023
web northern ireland statutory rules and orders 1971 no 256 the blackface rams scheme northern ireland 1971 language label description also known as english the blackface rams scheme northern ireland 1971 northern ireland statutory rules and orders 1971 no 256 statements instance of statutory rules and orders 1 reference
blackface rams revocation scheme northern ireland 1981 - Dec 07 2022
web buy blackface rams revocation scheme northern ireland 1981 statutory rules of northern ireland 1981 98 by great britain great britain isbn 9780337815980 from amazon s book store everyday low prices and free delivery on eligible orders
what is a tagine shopping food network food network - Jan 29 2023
web mar 10 2021 both the conical earthenware pot and the dish prepared in that cooking vessel share the name of tagine history tells us that the nomads in north africa used this timeless pot as a portable oven
tajine - Oct 06 2023
web here at tajine we preserve our own lemon peels and mix our own spice blend to create the perfectly balanced flavour we desire taste the flavours of starch staples like batbout bread semolina couscous and pastries like pastillas and cornes de gazelle
the morrocan tagine defined the spruce eats - Mar 31 2023
web jun 18 2019 a tagine is an important part of moroccan cuisine and has been a part of the culture for hundreds of years the word tagine actually has two meanings first it refers to a type of north african cookware traditionally made of clay or ceramic the bottom is a wide shallow circular dish used for both cooking and serving while the top of the
tajine traditional technique from morocco maghreb tasteatlas - Jun 02 2023
web tajine also known as tagine refers both to the rich moroccan stews and the cooking vessel used to make them when referring to the cooking vessel it is a round and shallow clay or ceramic casserole with a tall pointy conical lid
how to make moroccan chicken tajine tagine salima s kitchen - May 01 2023
web nov 9 2021 remove the tajine from the oven set the temperature to broil and using tongs move the chicken from the tajine to a baking sheet leaving behind the sauce olives and preserved lemons broil the chicken skin side up for 5 minutes or until the skin is golden brown and crispy
17 moroccan tagine recipes you ll love insanely good - Dec 28 2022

web jun 1 2022 these dishes might be new to you but trust me you re in for a treat 1 moroccan chicken tagine this moroccan chicken is braised with olives garlic onion spices and lemon the mix of spices and lemon gives the chicken a fragrant aroma and an otherworldly flavor traditionally chicken tagine uses preserved lemons which are a bit

tajine wikipedia - Sep 05 2023

web a tajine or tagine arabic □□□□□ is a north african dish named after the earthenware pot in which it is cooked it is also called maraq or marqa etymology

nyt cooking how to make tagine - Aug 04 2023

web remove from heat add apricots and let sit at least 15 minutes heat oven to 325 degrees in a tagine dutch oven or heavy bottomed pot with a tightfitting lid warm 2 tablespoons oil over medium heat until hot working in batches add lamb to pot leaving room around each piece this will help them brown

tagine recipes bbc good food - Feb 27 2023

web moroccan lamb meatballs 52 ratings these moroccan style lamb meatballs combine all the flavours of a tagine with the kick of homemade harissa and a cooling dollop of yogurt serve with couscous

how to cook in a moroccan tagine the spruce eats - Jul 03 2023

web jun 16 2020 christine benlafquih distribute some of the spice mixture over the meat and onions you can use up to 2 3 of the mixture at this step concentrating the seasoning on the onions so the spices will meld with the oil and liquids to make a rich flavorful sauce the reserved spices will be used to season the vegetables

lupo luca aveva i denti bacchilega editore - Jun 13 2023

web feb 16 2013 un lupo affamato dai denti aguzzi e tanta fame crea scompiglio nel bosco il lupo sfaticato non ascolta però i consigli di nutria nunzia la dentista e i denti si fanno neri e poi cadono a uno a uno come farà lupo luca la sua storia raccontata in versi divertenti finisce in un finale a sorpresa

libri per bambini lupo luca aveva i denti blog in - Nov 06 2022

web un lupo affamato dai denti aguzzi e tanta fame crea scompiglio nel bosco il lupo sfaticato non ascolta però i consigli di nutria nunzia la dentista e i denti si fanno neri e poi cadono a uno a uno come farà lupo luca la sua storia raccontata in versi divertenti finisce in un finale a sorpresa

lupo luca aveva i denti youtube - Dec 07 2022

web fondazione a r c a presenta la scatola libro di lupo luca aveva i denti bacchilega junior

lupo luca aveva i denti bacchilega editore - Mar 10 2023

web un lupo affamato dai denti aguzzi e tanta fame crea scompiglio nel bosco il lupo sfaticato non ascolta però i consigli di nutria nunzia la dentista e i denti si fanno neri e poi cadono a uno a uno come farà lupo luca la sua storia raccontata in ver si

divertenti finisce in un finale a sorpresa
lupo luca aveva i denti sogni d oro - Oct 05 2022
web apr 2 2018 un lupo affamato dai denti aguzzi e tanta fame crea scompiglio nel bosco il lupo sfaticato non ascolta però i consigli di nutria nunzia la dentista e i denti si fanno neri e poi cadono a uno a uno come farà lupo luca
lupo luca aveva i denti mazzoli elisa amazon com au books - Feb 26 2022
web select the department you want to search in
lupo luca aveva i denti di elisa mazzoli e febe sillani - Jan 08 2023
web aug 26 2021 lupo luca aveva i denti libretto in formato tascabile 16 16 nonostante le ridotte dimensioni si è dimostrato davvero un valido aiuto oltre a essere molto divertente con illustrazioni colorate e simpaticissime ci ha colpito per i suoi testi tutti in rima e dalla trama straordinariamente a sorpresa
lupo luca aveva i denti mazzoli elisa amazon it libri - Jul 14 2023
web lupo luca aveva i denti copertina flessibile 1 gennaio 2012 di elisa mazzoli autore 63 voti visualizza tutti i formati ed edizioni copertina flessibile 6 80 5 nuovo da 6 80 spedizione gratuita con consegna presso punti di ritiro se disponibile per il
lupo luca aveva i denti mazzoli elisa amazon es libros - Jan 28 2022
web selecciona tus preferencias de cookies utilizamos cookies y herramientas similares que son necesarias para permitirte comprar mejorar tus experiencias de compra y proporcionar nuestros servicios según se detalla en nuestro aviso de cookies también utilizamos estas cookies para entender cómo utilizan los clientes nuestros servicios por ejemplo
lupo luca aveva i denti bacchilega editore - Apr 11 2023
web lupo luca aveva i denti la bocca come un forno bisognava stare attenti non girargli tanto attorno lupo luca con la carie incrostata sulle zanne masticava le cibarie cani uccelli rospi e rane se mangiava prede vive avvertiva un po fastidio un prurito alle
lupo luca aveva i denti youtube - May 12 2023
web jul 3 2020 un libro per imparare fin da piccoli una corretta igiene orale un lupo affamato dai denti aguzzi crea scompiglio nel bosco pensa solo a mangiare e non ascol
lupo luca aveva i denti paperback jan 1 2012 amazon ca - Mar 30 2022
web lupo luca aveva i denti elisa mazzoli 9788896328569 books amazon ca skip to main content ca hello select your address books en hello sign in account lists returns orders cart all very merry deals
lupo luca aveva i denti libreria universitaria - Jul 02 2022
web acquista lupo luca aveva i denti su libreria universitaria spedizione gratuita sopra i 25 euro su libreria universitaria
amazon it lupo luca - Aug 03 2022

web lupo luca aveva i denti di elisa mazzoli 4 6 4 6 su 5 stelle 63 gratuita lun 6 feb sul tuo primo ordine idoneo oppure consegna più rapida sab 4 feb età 3 anni secondo gli editori lupo luca ha il salvagente di elisa mazzoli e febe sillani 5 0 5 0 su 5 stelle 2 copertina flessibile

lupo luca aveva i denti libro di elisa mazzoli macrolibrarsi - Feb 09 2023

web scheda tecnica autore recensioni 2 torna su acquistati insieme descrizione cosa è successo perchè lupo luca ha perso i denti un libro per imparare fin da piccoli una corretta igiene orale per incamminarsi a piccoli passi in nuove strade e in grandi spazi del cuore un lupo affamato dai denti aguzzi e tanta fame crea scompiglio nel bosco

amazon co jp lupo luca aveva i denti mazzoli elisa □□ - Dec 27 2021

web oct 1 2012 □□□□□□□□□□□□□□□

lupo luca aveva i denti mazzoli elisa amazon de bücher - Apr 30 2022

web lupo luca aveva i denti mazzoli elisa isbn 9788896328569 kostenloser versand für alle bücher mit versand und verkauf duch amazon

pdf lupo luca aveva i denti dokumen tips - Jun 01 2022

web lupo luca aveva i dentie bocca come un fornobisognava stare attentinon girargli tanto attorno lupo luca aveva i dentie bocca come un fornobisognava stare attentinon girargli tanto attorno lupo luca con carie incrostata sulle zannemasticava le

lupo luca aveva i denti elisa mazzoli libro libreria ibs - Aug 15 2023

web lupo luca aveva i denti è un libro di elisa mazzoli pubblicato da bacchilega editore acquista su ibs a 8 00

lupo luca aveva i denti lettura per bambini youtube - Sep 04 2022

web aug 14 2023 letto dalla mamma con anita 3 anni e mezzo