16x2 LCD interfacing to 8051 microcontroller

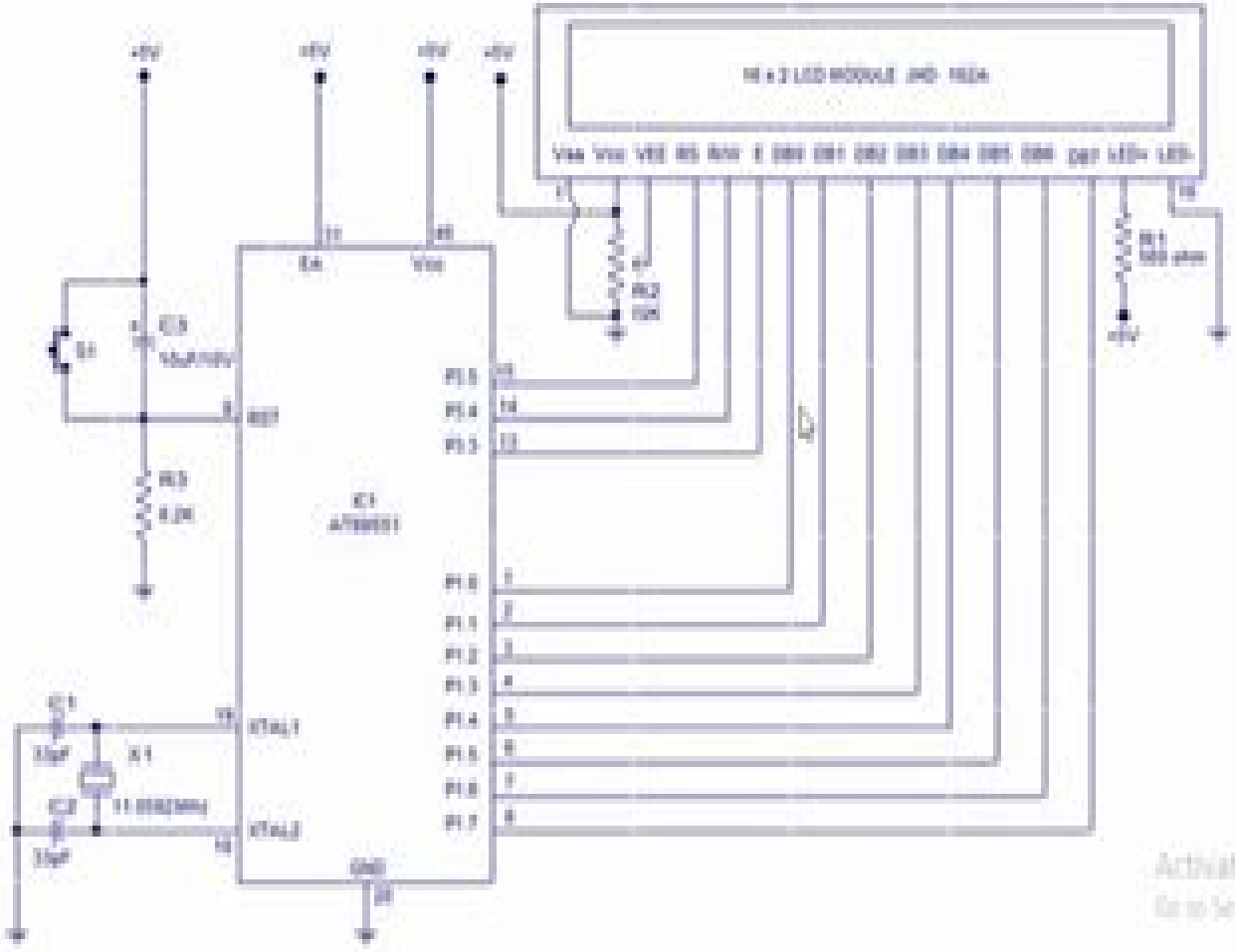

Activate Windows
Go to Settings to activate Windows.

Interfacing 16x2 Lcd With 8051 Microcontroller Lcd Module

RJ Alexander

Interfacing 16x2 Lcd With 8051 Microcontroller Lcd Module:

Interfacing 16x2 Lcd With 8051 Microcontroller Lcd Module Book Review: Unveiling the Power of Words

In some sort of driven by information and connectivity, the power of words has be evident than ever. They have the ability to inspire, provoke, and ignite change. Such may be the essence of the book **Interfacing 16x2 Lcd With 8051 Microcontroller Lcd Module**, a literary masterpiece that delves deep to the significance of words and their affect our lives. Compiled by a renowned author, this captivating work takes readers on a transformative journey, unraveling the secrets and potential behind every word. In this review, we will explore the book is key themes, examine its writing style, and analyze its overall affect readers.

https://py.bijouxmedusa.com/public/book-search/HomePages/Marketing%20Blueprint%20USA%2018%201406%20Affiliate%20Marketing%20Blueprint%20USA.pdf

Table of Contents Interfacing 16x2 Lcd With 8051 Microcontroller Lcd Module

1. Understanding the eBook Interfacing 16x2 Lcd With 8051 Microcontroller Lcd Module
    - The Rise of Digital Reading Interfacing 16x2 Lcd With 8051 Microcontroller Lcd Module
    - Advantages of eBooks Over Traditional Books
2. Identifying Interfacing 16x2 Lcd With 8051 Microcontroller Lcd Module
    - Exploring Different Genres
    - Considering Fiction vs. Non-Fiction
    - Determining Your Reading Goals
3. Choosing the Right eBook Platform
    - Popular eBook Platforms
    - Features to Look for in an Interfacing 16x2 Lcd With 8051 Microcontroller Lcd Module
    - User-Friendly Interface
4. Exploring eBook Recommendations from Interfacing 16x2 Lcd With 8051 Microcontroller Lcd Module
    - Personalized Recommendations
    - Interfacing 16x2 Lcd With 8051 Microcontroller Lcd Module User Reviews and Ratings

- Interfacing 16x2 Lcd With 8051 Microcontroller Lcd Module and Bestseller Lists

5. Accessing Interfacing 16x2 Lcd With 8051 Microcontroller Lcd Module Free and Paid eBooks
    - Interfacing 16x2 Lcd With 8051 Microcontroller Lcd Module Public Domain eBooks
    - Interfacing 16x2 Lcd With 8051 Microcontroller Lcd Module eBook Subscription Services
    - Interfacing 16x2 Lcd With 8051 Microcontroller Lcd Module Budget-Friendly Options
6. Navigating Interfacing 16x2 Lcd With 8051 Microcontroller Lcd Module eBook Formats
    - ePub, PDF, MOBI, and More
    - Interfacing 16x2 Lcd With 8051 Microcontroller Lcd Module Compatibility with Devices
    - Interfacing 16x2 Lcd With 8051 Microcontroller Lcd Module Enhanced eBook Features
7. Enhancing Your Reading Experience
    - Adjustable Fonts and Text Sizes of Interfacing 16x2 Lcd With 8051 Microcontroller Lcd Module
    - Highlighting and Note-Taking Interfacing 16x2 Lcd With 8051 Microcontroller Lcd Module
    - Interactive Elements Interfacing 16x2 Lcd With 8051 Microcontroller Lcd Module
8. Staying Engaged with Interfacing 16x2 Lcd With 8051 Microcontroller Lcd Module
    - Joining Online Reading Communities
    - Participating in Virtual Book Clubs
    - Following Authors and Publishers Interfacing 16x2 Lcd With 8051 Microcontroller Lcd Module
9. Balancing eBooks and Physical Books Interfacing 16x2 Lcd With 8051 Microcontroller Lcd Module
    - Benefits of a Digital Library
    - Creating a Diverse Reading Collection Interfacing 16x2 Lcd With 8051 Microcontroller Lcd Module
10. Overcoming Reading Challenges
    - Dealing with Digital Eye Strain
    - Minimizing Distractions
    - Managing Screen Time
11. Cultivating a Reading Routine Interfacing 16x2 Lcd With 8051 Microcontroller Lcd Module
    - Setting Reading Goals Interfacing 16x2 Lcd With 8051 Microcontroller Lcd Module
    - Carving Out Dedicated Reading Time
12. Sourcing Reliable Information of Interfacing 16x2 Lcd With 8051 Microcontroller Lcd Module
    - Fact-Checking eBook Content of Interfacing 16x2 Lcd With 8051 Microcontroller Lcd Module
    - Distinguishing Credible Sources

13. Promoting Lifelong Learning
    - Utilizing eBooks for Skill Development
    - Exploring Educational eBooks
14. Embracing eBook Trends
    - Integration of Multimedia Elements
    - Interactive and Gamified eBooks

Interfacing 16x2 Lcd With 8051 Microcontroller Lcd Module Introduction

Free PDF Books and Manuals for Download: Unlocking Knowledge at Your Fingertips In todays fast-paced digital age, obtaining valuable knowledge has become easier than ever. Thanks to the internet, a vast array of books and manuals are now available for free download in PDF format. Whether you are a student, professional, or simply an avid reader, this treasure trove of downloadable resources offers a wealth of information, conveniently accessible anytime, anywhere. The advent of online libraries and platforms dedicated to sharing knowledge has revolutionized the way we consume information. No longer confined to physical libraries or bookstores, readers can now access an extensive collection of digital books and manuals with just a few clicks. These resources, available in PDF, Microsoft Word, and PowerPoint formats, cater to a wide range of interests, including literature, technology, science, history, and much more. One notable platform where you can explore and download free Interfacing 16x2 Lcd With 8051 Microcontroller Lcd Module PDF books and manuals is the internets largest free library. Hosted online, this catalog compiles a vast assortment of documents, making it a veritable goldmine of knowledge. With its easy-to-use website interface and customizable PDF generator, this platform offers a user-friendly experience, allowing individuals to effortlessly navigate and access the information they seek. The availability of free PDF books and manuals on this platform demonstrates its commitment to democratizing education and empowering individuals with the tools needed to succeed in their chosen fields. It allows anyone, regardless of their background or financial limitations, to expand their horizons and gain insights from experts in various disciplines. One of the most significant advantages of downloading PDF books and manuals lies in their portability. Unlike physical copies, digital books can be stored and carried on a single device, such as a tablet or smartphone, saving valuable space and weight. This convenience makes it possible for readers to have their entire library at their fingertips, whether they are commuting, traveling, or simply enjoying a lazy afternoon at home. Additionally, digital files are easily searchable, enabling readers to locate specific information within seconds. With a few keystrokes, users can search for keywords, topics, or phrases, making research and finding relevant information a breeze. This efficiency saves time and effort, streamlining the learning process and allowing individuals to focus on extracting the information they need. Furthermore, the availability of free PDF books

and manuals fosters a culture of continuous learning. By removing financial barriers, more people can access educational resources and pursue lifelong learning, contributing to personal growth and professional development. This democratization of knowledge promotes intellectual curiosity and empowers individuals to become lifelong learners, promoting progress and innovation in various fields. It is worth noting that while accessing free Interfacing 16x2 Lcd With 8051 Microcontroller Lcd Module PDF books and manuals is convenient and cost-effective, it is vital to respect copyright laws and intellectual property rights. Platforms offering free downloads often operate within legal boundaries, ensuring that the materials they provide are either in the public domain or authorized for distribution. By adhering to copyright laws, users can enjoy the benefits of free access to knowledge while supporting the authors and publishers who make these resources available. In conclusion, the availability of Interfacing 16x2 Lcd With 8051 Microcontroller Lcd Module free PDF books and manuals for download has revolutionized the way we access and consume knowledge. With just a few clicks, individuals can explore a vast collection of resources across different disciplines, all free of charge. This accessibility empowers individuals to become lifelong learners, contributing to personal growth, professional development, and the advancement of society as a whole. So why not unlock a world of knowledge today? Start exploring the vast sea of free PDF books and manuals waiting to be discovered right at your fingertips.

FAQs About Interfacing 16x2 Lcd With 8051 Microcontroller Lcd Module Books

How do I know which eBook platform is the best for me? Finding the best eBook platform depends on your reading preferences and device compatibility. Research different platforms, read user reviews, and explore their features before making a choice. Are free eBooks of good quality? Yes, many reputable platforms offer high-quality free eBooks, including classics and public domain works. However, make sure to verify the source to ensure the eBook credibility. Can I read eBooks without an eReader? Absolutely! Most eBook platforms offer webbased readers or mobile apps that allow you to read eBooks on your computer, tablet, or smartphone. How do I avoid digital eye strain while reading eBooks? To prevent digital eye strain, take regular breaks, adjust the font size and background color, and ensure proper lighting while reading eBooks. What the advantage of interactive eBooks? Interactive eBooks incorporate multimedia elements, quizzes, and activities, enhancing the reader engagement and providing a more immersive learning experience. Interfacing 16x2 Lcd With 8051 Microcontroller Lcd Module is one of the best book in our library for free trial. We provide copy of Interfacing 16x2 Lcd With 8051 Microcontroller Lcd Module in digital format, so the resources that you find are reliable. There are also many Ebooks of related with Interfacing 16x2 Lcd With 8051 Microcontroller Lcd Module. Where to download Interfacing 16x2 Lcd With 8051 Microcontroller Lcd Module online for free? Are you looking for Interfacing 16x2 Lcd With 8051 Microcontroller Lcd

Module PDF? This is definitely going to save you time and cash in something you should think about. If you trying to find then search around for online. Without a doubt there are numerous these available and many of them have the freedom. However without doubt you receive whatever you purchase. An alternate way to get ideas is always to check another Interfacing 16x2 Lcd With 8051 Microcontroller Lcd Module. This method for see exactly what may be included and adopt these ideas to your book. This site will almost certainly help you save time and effort, money and stress. If you are looking for free books then you really should consider finding to assist you try this. Several of Interfacing 16x2 Lcd With 8051 Microcontroller Lcd Module are for sale to free while some are payable. If you arent sure if the books you would like to download works with for usage along with your computer, it is possible to download free trials. The free guides make it easy for someone to free access online library for download books to your device. You can get free download on free trial for lots of books categories. Our library is the biggest of these that have literally hundreds of thousands of different products categories represented. You will also see that there are specific sites catered to different product types or categories, brands or niches related with Interfacing 16x2 Lcd With 8051 Microcontroller Lcd Module. So depending on what exactly you are searching, you will be able to choose e books to suit your own need. Need to access completely for Campbell Biology Seventh Edition book? Access Ebook without any digging. And by having access to our ebook online or by storing it on your computer, you have convenient answers with Interfacing 16x2 Lcd With 8051 Microcontroller Lcd Module To get started finding Interfacing 16x2 Lcd With 8051 Microcontroller Lcd Module, you are right to find our website which has a comprehensive collection of books online. Our library is the biggest of these that have literally hundreds of thousands of different products represented. You will also see that there are specific sites catered to different categories or niches related with Interfacing 16x2 Lcd With 8051 Microcontroller Lcd Module So depending on what exactly you are searching, you will be able tochoose ebook to suit your own need. Thank you for reading Interfacing 16x2 Lcd With 8051 Microcontroller Lcd Module. Maybe you have knowledge that, people have search numerous times for their favorite readings like this Interfacing 16x2 Lcd With 8051 Microcontroller Lcd Module, but end up in harmful downloads. Rather than reading a good book with a cup of coffee in the afternoon, instead they juggled with some harmful bugs inside their laptop. Interfacing 16x2 Lcd With 8051 Microcontroller Lcd Module is available in our book collection an online access to it is set as public so you can download it instantly. Our digital library spans in multiple locations, allowing you to get the most less latency time to download any of our books like this one. Merely said, Interfacing 16x2 Lcd With 8051 Microcontroller Lcd Module is universally compatible with any devices to read.

Find Interfacing 16x2 Lcd With 8051 Microcontroller Lcd Module :

marketing blueprint USA 18-1406 affiliate marketing blueprint USA

~~18-1801 career growth strategies for entrepreneurs 18-617 career growth~~

home tech trends America 18-2951 smart home tech trends USA 18-2964
entrepreneurs 18-2197 electric vehicles examples for creators 18-648
~~marketing software for startups 18-966 digital marketing step by step~~
finance ideas for creators 18-2958 personal finance review America 18-15
blockchain development comparison for creators 18-369 blockchain
entrepreneurs 18-2386 career growth trends for entrepreneurs 18-2418
creators 18-1424 ecommerce trends step by step for small business
career growth ideas for startups 18-1964 career growth review United
States 18-197 fitness routines for beginners for small business 18-1186
cloud computing tips USA 18-903 cloud computing tips for entrepreneurs
18-2723 mobile app ideas blueprint for entrepreneurs 18-1956 mobile app
resume writing software for entrepreneurs 18-2498 resume writing step by
~~cybersecurity ideas America 18-2974 cybersecurity ideas for startups~~

Interfacing 16x2 Lcd With 8051 Microcontroller Lcd Module :

3 best examples daily report template free templates - Jun 12 2023
are you still confused about whether you should use a daily report or not let s see why daily reports are important so you can decide whether to see more
how to write a daily report in 5 simple steps learnesl - Oct 24 2021
web let s dive into what you should include when building a daily work report template how to prepare a daily report and the benefits of effective daily reporting what is a daily
10 free daily report templates to keep you on track clickup - Oct 04 2022
web aug 29 2022 10 a daily report template excel is a common practice in many offices and businesses by using this practice companies can keep track of how employees are
free daily work schedule templates smartsheet - Mar 29 2022
web jun 2 2022 5 examples to make a daily activity report in excel 1 making a daily activity report in excel to understand work progress the template in this section for the daily
the ultimate daily report template for teams and clients teamwork - Sep 22 2021

top 10 free daily report template excel on wps office - Nov 05 2022

web 77 daily report templates word pdf excel google docs in many offices and businesses daily task reporting is the norm this practice helps companies keep track

free daily progress report templates smartsheet - Jul 13 2023

before jumping right into creating the report it s better to learn what to include in it here is a list of things you can include in your daily report 1 the date and time of the report 2 a summary of the activity that was performed see more

how to make create a daily report templates - Feb 08 2023

web check this in depth guide to daily and weekly reports to learn best practices how successful teams implement these reports to increase employee satisfaction

free daily report template download in word - Dec 06 2022

web 28 templates create a blank daily report gray brain icon daily report report by canva creative studio green black minimalist modern daily report report by temptackle

paper and report design and layout templates microsoft create - Aug 02 2022

web free sample daily report card template dairy farming project report template end of project evaluation report free simple outlook new email student report template

77 daily report templates word pdf excel google - Mar 09 2023

web nov 27 2021 construction daily work progress report template download construction daily work progress report template microsoft excel create detailed but concise

15 daily report templates for your business - Aug 14 2023

a daily report is a document that lists the activities that happened during a specific day it s typically used by managers to keep track of their employees activities and to analyze their productivity you can create it at any time during the project still it s helpful when multiple stakeholders are involved see more

free daily sales report forms templates smartsheet - Nov 24 2021

web jan 10 2021 how to write the best daily report in english 1 add a header add a header in the top right corner of the page and you should also add the date when the

how to write a report for work with examples - May 11 2023

these 15 templates are professionally designed and can be used by businesses of different industries and sizes you can easily customize them to create amazing reports and give your business a professional edge see more

1 must have daily work report template free - Feb 25 2022

web may 12 2016 this daily work schedule template allows you to plan a single day by the hour view a week at a glance and add important notes keep your work day organized

daily report templates excel word template - Jul 01 2022
web pen perfect looking papers and reports every time when you start your assignment with a customizable design and layout template whether you want your paper to pop off the
how to write a report a guide grammarly - Jan 27 2022
web may 10 2023 for example a report could be formal or informal short or long and internal or external in business a vertical report shares information with people on different
free daily report word template download template net - Sep 03 2022
web sep 7 2023 1 clickup daily report template give a day by day update to all team members with the daily report template by clickup want to keep the ball rolling day to
18 daily work report templates free word excel samples - May 31 2022
web but after understanding the essence of it you might not cringe the next time you need to write a daily report this post contains 10 templates for daily report to help you write
free printable customizable daily report templates canva - Apr 10 2023
now that you know why daily reports are important and what to include let s learn how to write one follow the simple steps below to write your see more
daily report 22 examples format pdf examples - Jan 07 2023
web jul 21 2023 there are several types of work reports that you may be required to write including daily work reports sales reports and analyses while there is no set format
free 24 sample daily work report templates in - Dec 26 2021
web may 25 2022 a daily sales report template is a tool for monitoring sales data for a salesperson sales department or small business the report may show data for one
how to make daily activity report in excel 5 easy examples - Apr 29 2022
web 18 daily work report templates free written by admin in samples when a supervisor or any other senior person asks you about the daily work performance you must create
ebook j ecris je compte maternelle petite section 3 4an - Dec 09 2022
web j ecris je compte maternelle petite section 3 4an the letters and dispatches from 1702 to 1712 ed by general george murray nov 05 2021 sep 15 2022 tudes sur la
j ecris je compte maternelle petite section 3 4an - Oct 07 2022
web avec des sujets types d examens exemples de fiches pour l ep1 questions écrites pour l ep2 et exemples de projets d accueil pour l ep3 et des exemples de questions posées

j ecris je compte maternelle petite section 3 4ans by piccolia - Oct 19 2023
web section maternelle livre j apprends et j cris les lettres petite section 3 4 ans j ecris je compte maternelle grande section 5 6 achat mc en maternelle

j ecris je compte maternelle petite section 3 4an book - Aug 17 2023
web j ecris je compte maternelle petite section 3 4an tout le programme petite section apr 19 2021 pour accompagner l enfant tout au long de ses années de

j ecris je compte maternelle petite section 3 4an - Jul 16 2023
web je compte je joue avec babar petite section maternelle apr 28 2023 une collection gaie et colorée pour les enfants de 3 à 6 ans avec babar et ses amis

j ecris je compte maternelle petite section 3 4an oldcove - May 02 2022
web j ecris je compte maternelle petite section 3 4an education through work célestin freinet 1993 jack and jim kitty crowther 2000 09 02 jack the blackbird and jim the

j ecris je compte maternelle petite section 3 4an - Jun 15 2023
web j ecris je compte maternelle petite section 3 4an downloaded from ai classmonitor com by guest hinton josie premiers pédagogues rodopi conçu et rédigé par des

lire et écrire en petite section le coin des animateurs - Mar 12 2023
web trouver une activité écriture petite section de maternelle retrouvez des ressources sur la lecture et l écriture en ps sur le coin des animateurs

j ecris je compte maternelle petite section 3 4an pdf - Jun 03 2022
web j ecris je compte maternelle petite section 3 4an 1 j ecris je compte maternelle petite section 3 4an Œuvres completes oeuvres complètes de bossuet évêque de

j ecris je compte maternelle petite section 3 4an download only - Jul 04 2022
web je compte je joue avec babar grande section maternelle sep 14 2022 une collection gaie et colorée pour les enfants de 3 à 6 ans avec babar et ses amis

j ecris je compte maternelle petite section 3 4ans by piccolia - Feb 28 2022
web section cars j cris les nombres et je pte 3 6 ans j apprendre crire en petite section maternelle livre j ecris je pte maternelle petite section 3 4ans j apprends et j cris

j ecris je compte maternelle petite section 3 4ans by piccolia - Nov 27 2021
web j ecris je compte maternelle petite section 3 4ans by piccolia jecris je pte maternelle moyenne section 4 5ans ebook cartes cureuil dnombrement automne maternelle

de 0 à 3 ans petite section - May 14 2023
web apprendre à écrire de 0 à 3 ans des exercices et des conseils pour la petite section ou première année de maternelle des exercices et des conseils pour la petite section
j ecris je compte maternelle petite section 3 4ans by piccolia - Jan 30 2022
web jul 22 2023 j apprends et j cris les lettres petite section 3 4 ans programmes de maternelle il apprend quoi en petite section achat je lis j ecris pas cher ou d occasion
j ecris je compte maternelle petite section 3 4an full pdf - Sep 06 2022
web j ecris je compte maternelle petite section 3 4an bulletin société archéologique d alexandrie jun 23 2022 1841 1847 mar 09 2021 ollendorff s new method of
j ecris je compte maternelle moyenne section 4 5ans - Jan 10 2023
web j ecris je compte maternelle moyenne section 4 5ans piccolia isbn 9782753008984 et tous les livres scolaires en livraison 1 jour ouvré avec amazon premium
vers l écriture en petite section grandir avec nathan - Feb 11 2023
web vers l écriture en petite section entre 3 et 4 ans l enfant passe du gribouillage à un geste et un tracé plus maîtrisés des progrès qui vont lui permettre d accéder aux premières
j ecris je compte maternelle petite section 3 4an connie - Aug 05 2022
web j ecris je compte maternelle petite section 3 4an getting the books j ecris je compte maternelle petite section 3 4an now is not type of inspiring means you could not
j ecris je compte maternelle petite section 3 4an pdf free - Sep 18 2023
web webj ecris je compte maternelle petite section 3 4ans by piccolia description read download april 26th 2020 je découvre et j apprends à la maternelle toute petite
j ecris je compte maternelle petite section 3 4an copy 2013 - Nov 08 2022
web j ecris je compte maternelle petite section 3 4an 1 j ecris je compte maternelle petite section 3 4an oeuvres complètes de bossuet Œuvres completes si ana ne nous
j ecris je compte maternelle petite section 3 4an kazuo iwamura - Apr 13 2023
web jan 19 2023 4731899 j ecris je compte maternelle petite section 3 4an 1 10 downloaded from dev harirshop com on by guest j ecris je compte maternelle petite
j ecris je compte maternelle petite section 3 4ans by piccolia - Dec 29 2021
web maternelle j apprends et j cris les lettres petite section 3 4 ans j apprends et j cris les lettres moyenne section fiches d apprentissage de l criture des lettres capitales j

8 fun ways to teach your singapore pre schooler to - Apr 01 2022
web reading skills pelmanism this sounds far more complicated than it actually is all it really means is matching cards together usually a picture with a word to make the words
introducing the emblems of the infinite king podcast - Nov 05 2022
web jan 1 2020 linda galella vine voice basic tenets of christianity are arranged with reviewed in the united states on september 28 2019 7 keys that are used to build a
emblems of the infinite king enter the knowledge of the alibris - Jan 27 2022
web emblems of the infinite king enter the knowledge of the living god 24 99 in an imaginative journey through the grand story of the universe this book introduces kids
emblems of the infinite king j ryan lister 2019 - Mar 29 2022
web emblems of the infinite king trailer in an imaginative journey through the grand story of the universe this book introduces kids ages 10 to god s radiant beauty using the main
emblems of the infinite king enter the knowledge of the living god - Aug 02 2022
web in an imaginative journey through the grand story of the universe this book introduces kids ages 10 to god s radiant beauty using the main categories of systematic theology god
emblems of the infinite king enter the knowledge of the living - Oct 04 2022
web abebooks com emblems of the infinite king enter the knowledge of the living god 9781433563386 by lister j ryan and a great selection of similar new used and
introducing emblems of the infinite king crossway articles - Dec 06 2022
web oct 15 2019 over the course of eight days explore each of these foundational doctrines as you follow along on a journey through scripture adapted from emblems of the infinite
emblems of the infinite king enter the knowledge of the living - May 11 2023
web emblems of the infinite king enter the knowledge of the living god audible audiobook unabridged j ryan lister author narrator crossway publisher 4 9 184 ratings see
emblems of the infinite king enter the knowledge of the living - Feb 25 2022
web full of captivating illustrated emblems meant to symbolize key facets of christian doctrine this unique book seeks to bring theological truths from words to life the creative design
emblems of the infinite king enter the knowledge of the living - Jul 01 2022
web nov 4 2019 emblems of the infinite king enter the knowledge of the living god will be strategically placed in my section devoted to biblical theology lister s book will stand

emblems of the infinite king enter the knowledge of the - Jun 12 2023
web oct 15 2019 emblems of the infinite king is systematic theology with a narrative approach that carefully weaves together the doctrines of the christian faith making
emblems of the infinite king enter the knowledge of the living - Jan 07 2023
web full of captivating illustrated emblems meant to symbolize key facets of christian doctrine this unique book seeks to bring theological truths from words to life the creative design
emblems of the infinite king enter the knowledge of the living - Nov 24 2021

emblems of the infinite king an 8 day reading plan - Sep 03 2022
web in an imaginative journey through the grand story of the universe this book introduces kids ages 10 to god s radiant beauty using the main categories of systematic theology god
emblems of the infinite king enter the knowledge of the - Mar 09 2023
web oct 12 2019 in an imaginative journey through the grand story of the universe emblems of the infinite king enter the knowledge of the living god by j ryan lister introduces
emblems of the infinite king enter the knowledge of the living god - Feb 08 2023
web nov 14 2020 narrated by ryan lister author of emblems of the infinite king enter the knowledge of the living god and featuring an original score this 10 episode podcast is a
emblems of the infinite king enter the knowledge of the living - Dec 26 2021

emblems of the infinite king enter the knowledge of the living - May 31 2022
web oct 16 2019 emblems of the infinite king enter the knowledge of the living god by j ryan lister the synopsis in an imaginative journey through the grand story of the
emblems of the infinite king enter the knowledge of the living - Oct 24 2021

emblems of the infinite king enter the knowledge of the - Jul 13 2023
web buy emblems of the infinite king enter the knowledge of the living god by lister j ryan benedetto anthony m isbn 9781433563386 from amazon s book store free
emblems of the infinite king enter the knowledge of the - Apr 10 2023
web emblems of the infinite king enter the knowledge of the living god lister j ryan benedetto anthony m 9781433563386 books amazon ca

emblems of the infinite king enter the knowledge of the - Aug 14 2023
web oct 15 2019 retail price 24 99 in an imaginative journey through the grand story of the universe this book introduces kids ages 10 to god s radiant beauty using the main
emblems of the infinite king lifeway - Apr 29 2022
web buy emblems of the infinite king enter the knowledge of the living god by j ryan lister anthony m benedetto online at alibris we have new and used copies available in 1