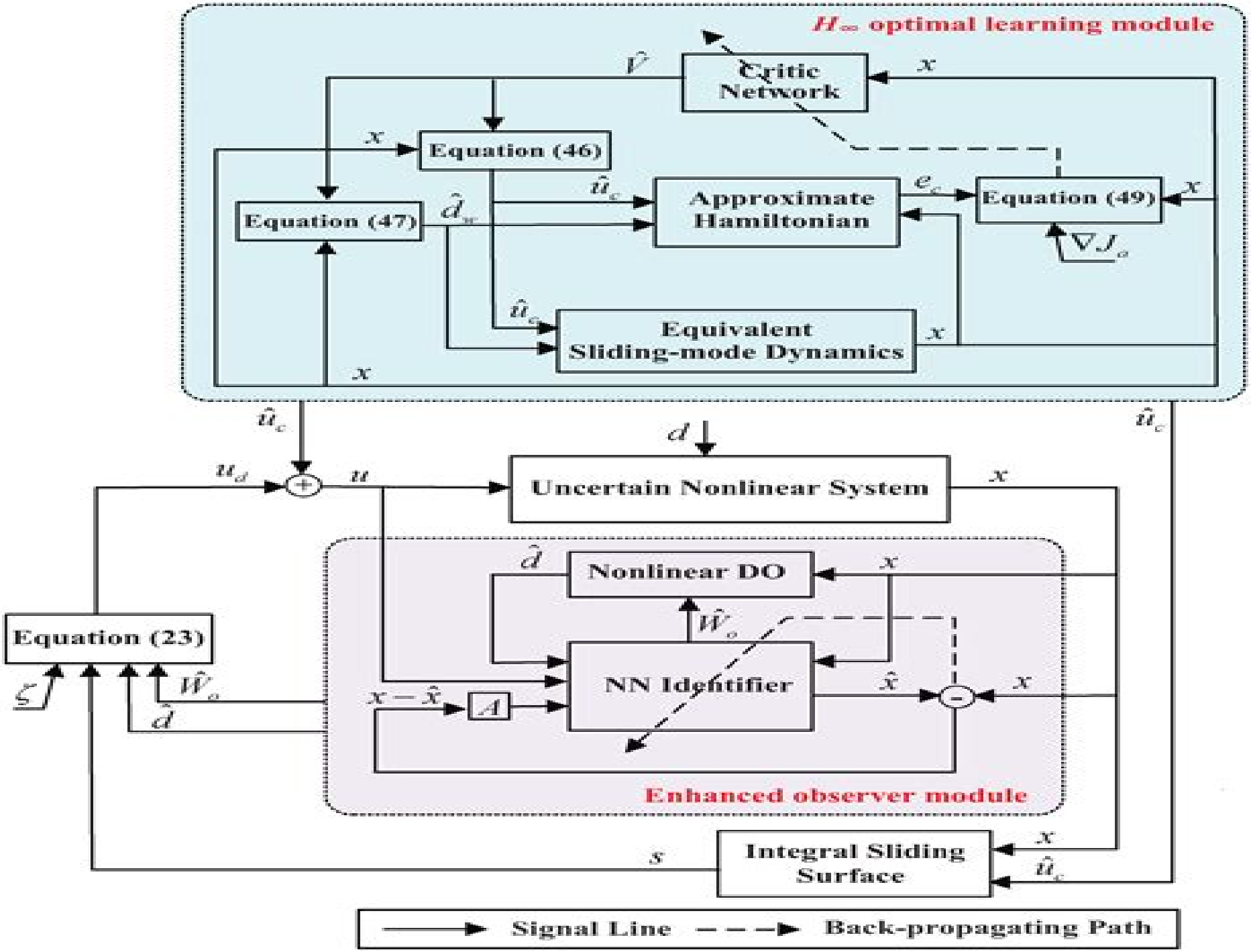
H_∞ optimal learning module
Critic Network
$\hat{V}$
x
Equation (46)
Equation (47)
$\hat{u}_c$
$\hat{d}_w$
Approximate Hamiltonian
e_c
Equation (49)
∇J_a
Equivalent Sliding-mode Dynamics
d
u_d
u
Uncertain Nonlinear System
Nonlinear DO
$\hat{d}$
$\hat{W}_a$
NN Identifier
$\hat{x}$
$x-\hat{x}$
A
Enhanced observer module
Equation (23)
ζ
Integral Sliding Surface
s
Signal Line
Back-propagating Path

Nonlinear Adaptive Observer Based Sliding Mode Control For

Anthony S. Fauci

Nonlinear Adaptive Observer Based Sliding Mode Control For:

Fuel your quest for knowledge with is thought-provoking masterpiece, Explore **Nonlinear Adaptive Observer Based Sliding Mode Control For** . This educational ebook, conveniently sized in PDF (PDF Size: *), is a gateway to personal growth and intellectual stimulation. Immerse yourself in the enriching content curated to cater to every eager mind. Download now and embark on a learning journey that promises to expand your horizons. .

https://py.bijouxmedusa.com/results/browse/default.aspx/Think_Social_Problems_2nd_Edition.pdf

Table of Contents Nonlinear Adaptive Observer Based Sliding Mode Control For

1. Understanding the eBook Nonlinear Adaptive Observer Based Sliding Mode Control For
    - The Rise of Digital Reading Nonlinear Adaptive Observer Based Sliding Mode Control For
    - Advantages of eBooks Over Traditional Books
2. Identifying Nonlinear Adaptive Observer Based Sliding Mode Control For
    - Exploring Different Genres
    - Considering Fiction vs. Non-Fiction
    - Determining Your Reading Goals
3. Choosing the Right eBook Platform
    - Popular eBook Platforms
    - Features to Look for in an Nonlinear Adaptive Observer Based Sliding Mode Control For
    - User-Friendly Interface
4. Exploring eBook Recommendations from Nonlinear Adaptive Observer Based Sliding Mode Control For
    - Personalized Recommendations
    - Nonlinear Adaptive Observer Based Sliding Mode Control For User Reviews and Ratings
    - Nonlinear Adaptive Observer Based Sliding Mode Control For and Bestseller Lists
5. Accessing Nonlinear Adaptive Observer Based Sliding Mode Control For Free and Paid eBooks
    - Nonlinear Adaptive Observer Based Sliding Mode Control For Public Domain eBooks
    - Nonlinear Adaptive Observer Based Sliding Mode Control For eBook Subscription Services
    - Nonlinear Adaptive Observer Based Sliding Mode Control For Budget-Friendly Options

6. Navigating Nonlinear Adaptive Observer Based Sliding Mode Control For eBook Formats
    - ePub, PDF, MOBI, and More
    - Nonlinear Adaptive Observer Based Sliding Mode Control For Compatibility with Devices
    - Nonlinear Adaptive Observer Based Sliding Mode Control For Enhanced eBook Features
7. Enhancing Your Reading Experience
    - Adjustable Fonts and Text Sizes of Nonlinear Adaptive Observer Based Sliding Mode Control For
    - Highlighting and Note-Taking Nonlinear Adaptive Observer Based Sliding Mode Control For
    - Interactive Elements Nonlinear Adaptive Observer Based Sliding Mode Control For
8. Staying Engaged with Nonlinear Adaptive Observer Based Sliding Mode Control For
    - Joining Online Reading Communities
    - Participating in Virtual Book Clubs
    - Following Authors and Publishers Nonlinear Adaptive Observer Based Sliding Mode Control For
9. Balancing eBooks and Physical Books Nonlinear Adaptive Observer Based Sliding Mode Control For
    - Benefits of a Digital Library
    - Creating a Diverse Reading Collection Nonlinear Adaptive Observer Based Sliding Mode Control For
10. Overcoming Reading Challenges
    - Dealing with Digital Eye Strain
    - Minimizing Distractions
    - Managing Screen Time
11. Cultivating a Reading Routine Nonlinear Adaptive Observer Based Sliding Mode Control For
    - Setting Reading Goals Nonlinear Adaptive Observer Based Sliding Mode Control For
    - Carving Out Dedicated Reading Time
12. Sourcing Reliable Information of Nonlinear Adaptive Observer Based Sliding Mode Control For
    - Fact-Checking eBook Content of Nonlinear Adaptive Observer Based Sliding Mode Control For
    - Distinguishing Credible Sources
13. Promoting Lifelong Learning
    - Utilizing eBooks for Skill Development
    - Exploring Educational eBooks
14. Embracing eBook Trends
    - Integration of Multimedia Elements

- Interactive and Gamified eBooks

Nonlinear Adaptive Observer Based Sliding Mode Control For Introduction

Free PDF Books and Manuals for Download: Unlocking Knowledge at Your Fingertips In todays fast-paced digital age, obtaining valuable knowledge has become easier than ever. Thanks to the internet, a vast array of books and manuals are now available for free download in PDF format. Whether you are a student, professional, or simply an avid reader, this treasure trove of downloadable resources offers a wealth of information, conveniently accessible anytime, anywhere. The advent of online libraries and platforms dedicated to sharing knowledge has revolutionized the way we consume information. No longer confined to physical libraries or bookstores, readers can now access an extensive collection of digital books and manuals with just a few clicks. These resources, available in PDF, Microsoft Word, and PowerPoint formats, cater to a wide range of interests, including literature, technology, science, history, and much more. One notable platform where you can explore and download free Nonlinear Adaptive Observer Based Sliding Mode Control For PDF books and manuals is the internets largest free library. Hosted online, this catalog compiles a vast assortment of documents, making it a veritable goldmine of knowledge. With its easy-to-use website interface and customizable PDF generator, this platform offers a user-friendly experience, allowing individuals to effortlessly navigate and access the information they seek. The availability of free PDF books and manuals on this platform demonstrates its commitment to democratizing education and empowering individuals with the tools needed to succeed in their chosen fields. It allows anyone, regardless of their background or financial limitations, to expand their horizons and gain insights from experts in various disciplines. One of the most significant advantages of downloading PDF books and manuals lies in their portability. Unlike physical copies, digital books can be stored and carried on a single device, such as a tablet or smartphone, saving valuable space and weight. This convenience makes it possible for readers to have their entire library at their fingertips, whether they are commuting, traveling, or simply enjoying a lazy afternoon at home. Additionally, digital files are easily searchable, enabling readers to locate specific information within seconds. With a few keystrokes, users can search for keywords, topics, or phrases, making research and finding relevant information a breeze. This efficiency saves time and effort, streamlining the learning process and allowing individuals to focus on extracting the information they need. Furthermore, the availability of free PDF books and manuals fosters a culture of continuous learning. By removing financial barriers, more people can access educational resources and pursue lifelong learning, contributing to personal growth and professional development. This democratization of knowledge promotes intellectual curiosity and empowers individuals to become lifelong learners, promoting progress and innovation in various fields. It is worth noting that while accessing free Nonlinear Adaptive Observer Based Sliding Mode Control For PDF books and manuals is convenient and cost-effective, it is vital to respect copyright laws and intellectual

property rights. Platforms offering free downloads often operate within legal boundaries, ensuring that the materials they provide are either in the public domain or authorized for distribution. By adhering to copyright laws, users can enjoy the benefits of free access to knowledge while supporting the authors and publishers who make these resources available. In conclusion, the availability of Nonlinear Adaptive Observer Based Sliding Mode Control For free PDF books and manuals for download has revolutionized the way we access and consume knowledge. With just a few clicks, individuals can explore a vast collection of resources across different disciplines, all free of charge. This accessibility empowers individuals to become lifelong learners, contributing to personal growth, professional development, and the advancement of society as a whole. So why not unlock a world of knowledge today? Start exploring the vast sea of free PDF books and manuals waiting to be discovered right at your fingertips.

FAQs About Nonlinear Adaptive Observer Based Sliding Mode Control For Books

1. Where can I buy Nonlinear Adaptive Observer Based Sliding Mode Control For books? Bookstores: Physical bookstores like Barnes & Noble, Waterstones, and independent local stores. Online Retailers: Amazon, Book Depository, and various online bookstores offer a wide range of books in physical and digital formats.
2. What are the different book formats available? Hardcover: Sturdy and durable, usually more expensive. Paperback: Cheaper, lighter, and more portable than hardcovers. E-books: Digital books available for e-readers like Kindle or software like Apple Books, Kindle, and Google Play Books.
3. How do I choose a Nonlinear Adaptive Observer Based Sliding Mode Control For book to read? Genres: Consider the genre you enjoy (fiction, non-fiction, mystery, sci-fi, etc.). Recommendations: Ask friends, join book clubs, or explore online reviews and recommendations. Author: If you like a particular author, you might enjoy more of their work.
4. How do I take care of Nonlinear Adaptive Observer Based Sliding Mode Control For books? Storage: Keep them away from direct sunlight and in a dry environment. Handling: Avoid folding pages, use bookmarks, and handle them with clean hands. Cleaning: Gently dust the covers and pages occasionally.
5. Can I borrow books without buying them? Public Libraries: Local libraries offer a wide range of books for borrowing. Book Swaps: Community book exchanges or online platforms where people exchange books.
6. How can I track my reading progress or manage my book collection? Book Tracking Apps: Goodreads, LibraryThing, and Book Catalogue are popular apps for tracking your reading progress and managing book collections. Spreadsheets: You can create your own spreadsheet to track books read, ratings, and other details.

7. What are Nonlinear Adaptive Observer Based Sliding Mode Control For audiobooks, and where can I find them? Audiobooks: Audio recordings of books, perfect for listening while commuting or multitasking. Platforms: Audible, LibriVox, and Google Play Books offer a wide selection of audiobooks.
8. How do I support authors or the book industry? Buy Books: Purchase books from authors or independent bookstores. Reviews: Leave reviews on platforms like Goodreads or Amazon. Promotion: Share your favorite books on social media or recommend them to friends.
9. Are there book clubs or reading communities I can join? Local Clubs: Check for local book clubs in libraries or community centers. Online Communities: Platforms like Goodreads have virtual book clubs and discussion groups.
10. Can I read Nonlinear Adaptive Observer Based Sliding Mode Control For books for free? Public Domain Books: Many classic books are available for free as theyre in the public domain. Free E-books: Some websites offer free e-books legally, like Project Gutenberg or Open Library.

Find Nonlinear Adaptive Observer Based Sliding Mode Control For :

think social problems 2nd edition
the universal generating function in reliability analysis and optimization springer series in reliability engineering
the origin of consciousness in breakdown bicameral mind julian jaynes
the revelation of god in christ
~~thermodynamics 7th edition solution yunus a cengel~~
the myth of progress toward a sustainable future
~~the term 1 economics question paper grade 11 possible questions and essays 2014~~
the tanning of america how hip hop created a culture that rewrote the rules of the new economy paperback 2012 author steve stoute
~~the open empire a history of china to 1600~~
the nine spiritual gifts of the holy spirit bible charts
the practice of network security monitoring understanding incident detection and response richard bejtlich
the power of right believing joseph prince pdf
the road to excellence ericsson pdf free
the titanic song
~~the pure and the impure~~

Nonlinear Adaptive Observer Based Sliding Mode Control For :

imperium 2016 film wikipedia - Dec 15 2022
web imperium is a 2016 american crime thriller film written and directed by daniel ragussis in his feature film debut from a story by michael german the film stars daniel radcliffe toni collette tracy letts nestor carbonell and sam trammell

imperium 2016 imdb - Jul 22 2023
web aug 19 2016 idealistic fbi agent nate foster goes undercover to take down a radical white supremacy terrorist group the up and coming analyst must confront the challenge of sticking to a new identity while maintaining his real principles as he navigates the dangerous underworld of white supremacy lionsgate premiere

imperium nedir ne demek - Feb 17 2023
web imperium ne demek imparator hakimiyeti hakimiyet egemenlik imperium in imperio imparatorluk içinde imparatorluk krallık içinde krallık latince imperial imparator muhteşem şey keçi sakalı üst bagaj imparatora veya imparatorluga ait imparatora yakışır şahane ingiliz ölçü standartlanna uygun keçi sakalı

imperium vikipedi - Aug 23 2023
web İmperium latince imperare kelimesinden hüküm sürmek emretmek buyurmak anlamlarında geniş anlamda sahip olan kişiye göreviyle ilgili emretme yetkisi veren latince terim roma cumhuriyeti nde İmperium yetkisine sahip kişi magistra ya da promagistra olarak kendisine tevdi edilmiş kanuni hakları yerine getirme konusunda

İmperium türkçe bilgi - Jan 16 2023
web İmperium latince imperare kelimesinden a hüküm sürmek a emretmek a buyurmak anlamında geniş anlamda sahip olan kişiye göreviyle ilgili emretme yetkisi veren latince terim roma cumhuriyeti nde İmperium yetkisine sahip kişi magistra ya da promagistra olarak kendisine tevdi edilmiş kanuni hakları yerine getirme konusunda

imperium - Sep 24 2023
web imperium no1 residence proje İstanbul un kalbinde e5 yolu üzerinde Çağlayan adliyesi ne 950 metre mesafede perpa ticaret merkezi ve okmeydanı devlet hastanesi nin ise tam karşısında yer almaktadır

imperium tv modelleri ve fiyatları arçelik - Jun 21 2023
web led lcd tv 3 65 İnç 165 ekran tv 2 imperium tv 6 büyük ekran tv 5 50 İnç 127 ekran tv 1 televizyon 6 4k uhd tv 6 55 İnç 140 ekran tv 3 smart tv 1 4k oled tv 2 android tv 3 ekran boyutuna göre tv ler 6 google tv 1

arçelik İyiliği aşkla tasarlar - Mar 18 2023
web imperium go sd 9041k Şarjlı dik süpürge imperium robo ile vaktiniz size kalsın 11 999 tl İncele lenovo tab m10 hd 2 nesil za6w0121tr İncele lenovo tab m10 plus 3 nesil zaaj0353tr 5 999 tl İncele hayatı güzelleştiren teknolojiler yıkama teknolojileri hijyenmax

imperium wikipedia - May 20 2023
web in ancient rome imperium was a form of authority held by a citizen to control a military or governmental entity it is distinct from auctoritas and potestas different and generally inferior types of power in the roman republic and empire one s imperium could be over a specific military unit or it could be over a province or territory
imperium robo 2 0 rs 9121 fiyatını gör İncele satın al - Apr 19 2023
web imperium robo 2 0 rs 9121 fiyatını gör İncele satın al fiyatı ve teknik özelliklerini incelemek kullanıcı yorumlarını okumak ve siparişinizi arcelik ten eşsiz fırsatlarla ve online vermek için tıklayın
listening to the right reverend his grace dr b e lekganyane facebook - Aug 11 2022
web log in forgot account
his grace bishop dr b e lekganyane friday 21 2022 facebook - Feb 17 2023
web his grace bishop dr b e lekganyane friday 21 2022 his grace bishop dr b e lekganyane by music is king facebook
zcc easter sermon his grace the right rev bishop dr b e lekganyane - Sep 12 2022
web zcc easter sermon his grace the right rev bishop dr b e lekganyane view description share published may 5 2019 12 00 pm description church sermons from pastors priests bishops of various churches
his grace the right rev dr be lekganyane special sermon thero - Mar 18 2023
web the importance of confessions
genel cerrahi doktorlarını uzmanlarını listele en yakın uzmandan - Jan 04 2022
web genel cerrahi toplam 5658 uzman bulundu popüler Şehirler İstanbul ankara İzmir bursa antalya tüm Şehirler
lecture series 2019 his grace the right rev bishop dr youtube - Jul 22 2023
web sep 25 2019 2 3k 414k views 3 years ago his grace the right rev bishop dr barnabas e lekganyane gives a lecture on the zion christian church praying for peace in a changing south african and
his grace the right rev bishop dr b e lekganyane - Jun 09 2022
web sep 9 2018 his grace the right rev bishop dr b e lekganyane view description share published sep 9 2018 12 00 pm description church sermons from pastors priests bishops of various churches share play from 00 00
today the bishop of the zcc his grace the right reverend dr - Dec 15 2022
web today the bishop of the zcc his grace the right reverend dr b e lekganyane and the bishop of the zcc st engenas bishop joseph lekganyane returned by limpopo department of health bophelong facebook
his grace bishop dr b e lekganyane pdfsdocuments2 full pdf - Feb 05 2022
web delivered his sermon on the redemptive power of love at the royal wedding of prince harry and meghan markle at windsor castle here he expands on his message of hope in an inspirational road map for living the way of love illuminated

with moving lessons from his own life through the prism of his faith ancestry and personal journey love is

his grace dr bishop be lekganyane - Apr 07 2022

web the zion christian church announces peace mission to israel the leadership of the zion christian church and his grace bishop dr barnabas lekganyane is pleased to announce the commencement of the zcc peace mission to israel

zcc bishop b e lekganyane thero ya easter good friday 2020 april his - Jan 16 2023

web jun 25 2021 zcc bishop b e lekganyane thero ya easter good friday 2020 april his grace please subscribe masione afro lions 101 subscribers subscribe 20k views 2

his grace the right rev bishop dr barnabas lekganyane 2017 youtube - Jun 21 2023

web his grace the right rev bishop dr barnabas lekganyane 2017 national day of prayer speech the big animal production 197 subscribers

homepage welcome to the kganya website - May 20 2023

web kganya website his grace the right reverend bishop dr be lekganyane started kganya in 1990 to protect his congregation against tough financial times when a family member passes away his grace the bishop wants every member to be treated fairly equally and professionally at all times

a c al l to fai th l e ad e r s to k e e p th e e c ol ogi c al s u s - May 08 2022

web his grace the right reverend bishop dr b e lekganyane shared a public lecture entitled ecological sustainability as a topic of redemption within the theology of the zion christian church zcc on 29 october 2019 this lecture was given at the international conference

zion christian church university of cape town - Nov 14 2022

web his grace bishop b e lekganyane tel 0152 2671124 5 zion city moria fax 0152 2671124 5 p o box 1 boyne 0728 pietersburg chairperson archbishop tutu members of the truth and reconciliation commission brothers and sisters we greet you in the name of peace the name of our lord jesus christ

his grace the right rev bishop dr barnabas lekgnyane 2019 youtube - Aug 23 2023

web jan 21 2023 his grace the right rev bishop dr barnabas lekgnyane 2019 national day of prayer speech the big animal production

zcc september sermon his grace the right rev bishop dr b e lekganyane - Oct 13 2022

web zcc september sermon his grace the right rev bishop dr b e lekganyane

zcc easter sermon his grace the right rev bishop dr b e lekganyane - Jul 10 2022

web may 5 2019 sleep timer off end of episode 5 minutes 10 minutes 15 minutes 30 minutes 45 minutes 60 minutes 120 minutes

about us welcome to the kganya website - Apr 19 2023
web his grace the right reverend bishop dr be lekganyane chairman em lekganyane deputy chairman and ceo jm mosotho executive message from his grace the right reverend bishop dr b e lekganyane the kganya group celebrated its 31 st anniversary in march of 2021
i ve just met his grace dr mokgweetsi e k masisi facebook - Mar 06 2022
web mokgweetsi e k masisi march 29 2019 i ve just met his grace dr barnabas edward lekganyane bishop of the zcc zion christian church who paid a courtesy call to my office this morning i m truly delighted at the relationship
data collection plan a key component of the intelligence cycle - Apr 03 2023
web jul 1 2020 data collection is a major step in the intelligence cycle as it involves gathering the information to be used in other stages of the process and delivering the intelligence product to the relevant decision makers reliable and trustworthy data can be obtained from a wide variety of sources osint open source intelligence webint
getting started college of policing - Apr 22 2022
web some may require the user to register or pay a small fee for example online news media academic research and the electoral roll collection plans a key tool for analysts at the outset of any task is the collection plan these plans may be structured in a table or spreadsheet collection plans provide a structure for collecting information
optimize your security program with an intelligence collection plan - Dec 31 2022
web commonly used in military law enforcement and intelligence agency arenas intelligence collection plans icps require decision makers to task their teams with prioritizing and collecting a wide array of pertinent information within a specific time frame that is continuously updated and evaluated in a law enforcement setting for example
types of intelligence collection intelligence studies libguides - Oct 29 2022
web oct 18 2023 the five disciplines of intelligence collection by mark m lowenthal editor editor robert m clark editor isbn 9781452217635 publication date 2015 01 14 request through ill ic21 intelligence community in the
intelligence collection requirements plan - Nov 29 2022
web intelligence management the art of influence intelligence collection requirements plan context global issue national issue priority warning issues threat matrix development information arising from these collection requirements will be fed into the agencies threat assessment matrix the attributes used in this assessment
pdf intelligence collection how to plan and execute intelligence - May 04 2023
web pdf on sep 1 2013 harry nimon published intelligence collection how to plan and execute intelligence collection in complex environments by wayne michael hall and gary citrenbaum santa
requirements planning direction intelligence studies - Jul 26 2022

web sep 15 2008 in library intelligence requirements for operations other than war by national park service nps created by bruce h guggenberger call number ub251 u6 g84 2000a isbn 9781249369271 publication date 2012 09 01 in library intelligence requirements for the 1990 s by roy s godson call number ub251 u5 i56 1989 isbn

fm 34 2 chptr 3 the collection management process - May 24 2022

web an example of one collection planning problem cueing maximizes the efficient use of finite collection assets in support of multiple often competing intelligence collection priorities plan to create opportunities for cued collection as part of your strategy for example you plan to use a low level humint source 24 hours prior to uav

libguides intelligence studies the intelligence cycle - Feb 01 2023

web oct 18 2023 the cycle involves developing unrefined data into polished intelligence for the use of policymakers the cycles consists of six steps requirements planning direction collection processing analysis production dissemination and feedback the process is circular in nature but movement between the stages can be fluid

information collection plan and reconnaissance and security - Mar 22 2022

web doctrine gives us an example timeline for parallel planning efforts at the brigade level using the brigade planning process mapped to cavalry squadron actions and the planning timeline

fm 34 2 appendix a the collection plan federation of - Jun 05 2023

web the intelligence collection plan worksheet is a valuable aid in planning and directing the collection effort for many requirements particularly those concerned with enemy capabilities and vulnerabilities a written collection worksheet is advisable figure a 2 provides an example of a completed collection plan using sample entries

intelligence collection development and dissemination - Aug 07 2023

web 16 march 2015 latest changes written by college of policing intelligence management 5 mins read the collection development and dissemination of intelligence allow decisions to be made about priorities and tactical options intelligence collection is a continuous process and there may be specific requirements for its recording and use

intelligence collection plan wikipedia - Oct 09 2023

web an intelligence collection plan icp is the systematic process used by most modern armed forces and intelligence services to meet intelligence requirements through the tasking of all available resources to gather and provide pertinent information within a required time limit 1 creating a collection plan is part of the intelligence cycle

intelligence collection an overview sciencedirect topics - Sep 27 2022

web intelligence is information it is data or facts regarding current past or future events or associations intelligence collection can be thought of as a part of the follow up phase of investigation however in many cases intelligence is collected as an ongoing process not after a specific event one reason for collecting intelligence is to

an introduction to the intelligence cycle intelligence101 - Jun 24 2022
web dec 4 2016 the intelligence cycle is a process used by analysts to create intelligence the process allows the intelligence analysts to identifying the customers information requirements and develop an intelligence collection plan to collect the information required the raw information is then analyzed to provide meaning and assessments

intelligence collection plans preparation breeds success - Jul 06 2023
web apr 7 2022 a very simple example of the beginnings of an icp once the irs have been added the next stage of creating an icp is to consider the sources required to collect information to answer the irs it is crucial to consider internal sources first we need to know what we already know before looking further

intelligence collection management wikipedia - Aug 27 2022
web intelligence collection management is the process of managing and organizing the collection of intelligence from various sources discipline specialists and resource schedulers select the appropriate collection system and plan the mission taking into account the capabilities and limitations of collection platforms an example is

appendix d collection plan formats and instructions globalsecurity org - Sep 08 2023
web standard collection plan format with sample entries d 2 fm 34 7 determine potential indicators second determine what activities in or characteristics of the operational area will answer

optimize your security program with an intelligence collection plan - Mar 02 2023
web apr 16 2019 commonly used in military law enforcement and intelligence agency arenas intelligence collection plans icps require decision makers to task their teams with prioritizing and collecting a wide array of pertinent information within a specific time frame that is continuously updated and evaluated in a law enforcement setting for example

the guiding of intelligence collection the world factbook - Feb 18 2022
web consumers and of collection mechanisms in the u s intelligence community i am using the term consumer in the broadest sense in order to avoid shades of distinction among the various stages of processing or intelligence production and the various policy making levels of consumption from the collector s standpoint the rest of us are