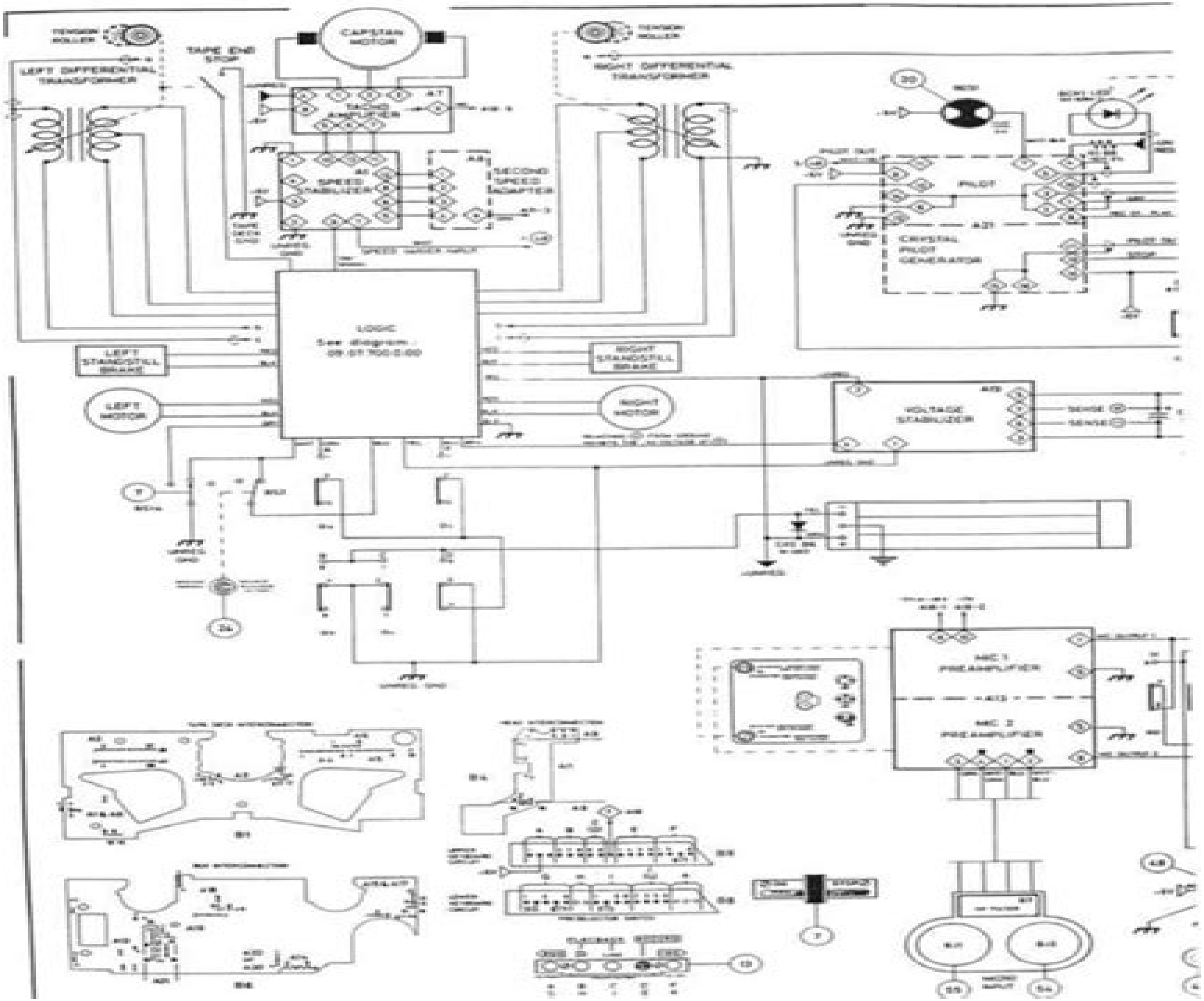

CAPSTAN MOTOR
TENSION ROLLER
TAPE END STOP
LEFT DIFFERENTIAL TRANSFORMER
RIGHT DIFFERENTIAL TRANSFORMER
TACHO AMPLIFIER
SPEED STABILIZER
SECOND SPEED ADAPTER
PILOT
CRYSTAL PILOT GENERATOR
LOGIC
See diagram 09.07.700-0.00
LEFT STANDSTILL BRAKE
RIGHT STANDSTILL BRAKE
LEFT MOTOR
RIGHT MOTOR
VOLTAGE STABILIZER
SENSE
MIC 1 PREAMPLIFIER
MIC 2 PREAMPLIFIER

Nagra 4 S Reel Original Schematic In English Language

Hongru Du

Nagra 4 S Reel Original Schematic In English Language:

This is likewise one of the factors by obtaining the soft documents of this **Nagra 4 S Reel Original Schematic In English Language** by online. You might not require more time to spend to go to the books commencement as with ease as search for them. In some cases, you likewise attain not discover the proclamation Nagra 4 S Reel Original Schematic In English Language that you are looking for. It will definitely squander the time.

However below, subsequently you visit this web page, it will be suitably no question easy to acquire as well as download guide Nagra 4 S Reel Original Schematic In English Language

It will not believe many time as we tell before. You can realize it though perform something else at house and even in your workplace. therefore easy! So, are you question? Just exercise just what we find the money for below as capably as review **Nagra 4 S Reel Original Schematic In English Language** what you taking into account to read!

https://py.bijouxmedusa.com/public/Resources/Download_PDFS/Trends_For_Startups_83_1975_YouTube_Growth_Tutorial_For_Creators_83_2634.pdf

Table of Contents Nagra 4 S Reel Original Schematic In English Language

1. Understanding the eBook Nagra 4 S Reel Original Schematic In English Language
    - The Rise of Digital Reading Nagra 4 S Reel Original Schematic In English Language
    - Advantages of eBooks Over Traditional Books
2. Identifying Nagra 4 S Reel Original Schematic In English Language
    - Exploring Different Genres
    - Considering Fiction vs. Non-Fiction
    - Determining Your Reading Goals
3. Choosing the Right eBook Platform
    - Popular eBook Platforms
    - Features to Look for in an Nagra 4 S Reel Original Schematic In English Language
    - User-Friendly Interface

4. Exploring eBook Recommendations from Nagra 4 S Reel Original Schematic In English Language
    - Personalized Recommendations
    - Nagra 4 S Reel Original Schematic In English Language User Reviews and Ratings
    - Nagra 4 S Reel Original Schematic In English Language and Bestseller Lists
5. Accessing Nagra 4 S Reel Original Schematic In English Language Free and Paid eBooks
    - Nagra 4 S Reel Original Schematic In English Language Public Domain eBooks
    - Nagra 4 S Reel Original Schematic In English Language eBook Subscription Services
    - Nagra 4 S Reel Original Schematic In English Language Budget-Friendly Options
6. Navigating Nagra 4 S Reel Original Schematic In English Language eBook Formats
    - ePub, PDF, MOBI, and More
    - Nagra 4 S Reel Original Schematic In English Language Compatibility with Devices
    - Nagra 4 S Reel Original Schematic In English Language Enhanced eBook Features
7. Enhancing Your Reading Experience
    - Adjustable Fonts and Text Sizes of Nagra 4 S Reel Original Schematic In English Language
    - Highlighting and Note-Taking Nagra 4 S Reel Original Schematic In English Language
    - Interactive Elements Nagra 4 S Reel Original Schematic In English Language
8. Staying Engaged with Nagra 4 S Reel Original Schematic In English Language
    - Joining Online Reading Communities
    - Participating in Virtual Book Clubs
    - Following Authors and Publishers Nagra 4 S Reel Original Schematic In English Language
9. Balancing eBooks and Physical Books Nagra 4 S Reel Original Schematic In English Language
    - Benefits of a Digital Library
    - Creating a Diverse Reading Collection Nagra 4 S Reel Original Schematic In English Language
10. Overcoming Reading Challenges
    - Dealing with Digital Eye Strain
    - Minimizing Distractions
    - Managing Screen Time
11. Cultivating a Reading Routine Nagra 4 S Reel Original Schematic In English Language
    - Setting Reading Goals Nagra 4 S Reel Original Schematic In English Language
    - Carving Out Dedicated Reading Time

12. Sourcing Reliable Information of Nagra 4 S Reel Original Schematic In English Language
    - Fact-Checking eBook Content of Nagra 4 S Reel Original Schematic In English Language
    - Distinguishing Credible Sources
13. Promoting Lifelong Learning
    - Utilizing eBooks for Skill Development
    - Exploring Educational eBooks
14. Embracing eBook Trends
    - Integration of Multimedia Elements
    - Interactive and Gamified eBooks

Nagra 4 S Reel Original Schematic In English Language Introduction

In the digital age, access to information has become easier than ever before. The ability to download Nagra 4 S Reel Original Schematic In English Language has revolutionized the way we consume written content. Whether you are a student looking for course material, an avid reader searching for your next favorite book, or a professional seeking research papers, the option to download Nagra 4 S Reel Original Schematic In English Language has opened up a world of possibilities. Downloading Nagra 4 S Reel Original Schematic In English Language provides numerous advantages over physical copies of books and documents. Firstly, it is incredibly convenient. Gone are the days of carrying around heavy textbooks or bulky folders filled with papers. With the click of a button, you can gain immediate access to valuable resources on any device. This convenience allows for efficient studying, researching, and reading on the go. Moreover, the cost-effective nature of downloading Nagra 4 S Reel Original Schematic In English Language has democratized knowledge. Traditional books and academic journals can be expensive, making it difficult for individuals with limited financial resources to access information. By offering free PDF downloads, publishers and authors are enabling a wider audience to benefit from their work. This inclusivity promotes equal opportunities for learning and personal growth. There are numerous websites and platforms where individuals can download Nagra 4 S Reel Original Schematic In English Language. These websites range from academic databases offering research papers and journals to online libraries with an expansive collection of books from various genres. Many authors and publishers also upload their work to specific websites, granting readers access to their content without any charge. These platforms not only provide access to existing literature but also serve as an excellent platform for undiscovered authors to share their work with the world. However, it is essential to be cautious while downloading Nagra 4 S Reel Original Schematic In English Language. Some websites may offer pirated or illegally obtained copies of copyrighted material. Engaging in such activities not only violates copyright laws but also undermines the efforts of

authors, publishers, and researchers. To ensure ethical downloading, it is advisable to utilize reputable websites that prioritize the legal distribution of content. When downloading Nagra 4 S Reel Original Schematic In English Language, users should also consider the potential security risks associated with online platforms. Malicious actors may exploit vulnerabilities in unprotected websites to distribute malware or steal personal information. To protect themselves, individuals should ensure their devices have reliable antivirus software installed and validate the legitimacy of the websites they are downloading from. In conclusion, the ability to download Nagra 4 S Reel Original Schematic In English Language has transformed the way we access information. With the convenience, cost-effectiveness, and accessibility it offers, free PDF downloads have become a popular choice for students, researchers, and book lovers worldwide. However, it is crucial to engage in ethical downloading practices and prioritize personal security when utilizing online platforms. By doing so, individuals can make the most of the vast array of free PDF resources available and embark on a journey of continuous learning and intellectual growth.

FAQs About Nagra 4 S Reel Original Schematic In English Language Books

How do I know which eBook platform is the best for me? Finding the best eBook platform depends on your reading preferences and device compatibility. Research different platforms, read user reviews, and explore their features before making a choice. Are free eBooks of good quality? Yes, many reputable platforms offer high-quality free eBooks, including classics and public domain works. However, make sure to verify the source to ensure the eBook credibility. Can I read eBooks without an eReader? Absolutely! Most eBook platforms offer web-based readers or mobile apps that allow you to read eBooks on your computer, tablet, or smartphone. How do I avoid digital eye strain while reading eBooks? To prevent digital eye strain, take regular breaks, adjust the font size and background color, and ensure proper lighting while reading eBooks. What the advantage of interactive eBooks? Interactive eBooks incorporate multimedia elements, quizzes, and activities, enhancing the reader engagement and providing a more immersive learning experience. Nagra 4 S Reel Original Schematic In English Language is one of the best book in our library for free trial. We provide copy of Nagra 4 S Reel Original Schematic In English Language in digital format, so the resources that you find are reliable. There are also many Ebooks of related with Nagra 4 S Reel Original Schematic In English Language. Where to download Nagra 4 S Reel Original Schematic In English Language online for free? Are you looking for Nagra 4 S Reel Original Schematic In English Language PDF? This is definitely going to save you time and cash in something you should think about.

Find Nagra 4 S Reel Original Schematic In English Language :

trends for startups 83-1975 YouTube growth tutorial for creators 83-2634
startups 83-2768 online privacy review America 83-937 online privacy marketing roadmap America 83-1594 affiliate marketing roadmap for
blueprint for creators 83-2258 business automation case study America
USA 83-2102 cybersecurity software United States 83-225 cybersecurity
83-1351 electric vehicles tips United States 83-1032 electric vehicles
development case study for small business 83-2453 chatbot development
83-780 wearable technology comparison for entrepreneurs 83-969 wearable
~~TikTok marketing blueprint USA 83-805 TikTok marketing blueprint United~~
real estate investing step by step for entrepreneurs 83-1708 real estate
startups 83-1257 online business ideas America 83-1742 online business software for entrepreneurs 83-669 resume writing step by step USA 83-692
America 83-537 Instagram growth apps USA 83-1077 Instagram growth apps
~~interview tips comparison USA 83-268 interview tips comparison for~~
83-308 business automation step by step for entrepreneurs 83-1866

Nagra 4 S Reel Original Schematic In English Language :

quickbooks 2022 for dummies cheat sheet - Aug 26 2022
web updated 10 01 2021 from the book quickbooks 2021 for dummies quickbooks 2021 for dummies explore book buy on amazon quickbooks 2022 makes small business accounting fast and easy but your day to day business bookkeeping will go even more smoothly if you employ a handful of quickbooks user interface tricks editing tricks and

quickbooks 2024 all in one for dummies - Jul 25 2022
web quickbooks 2024 all in one for dummies is the solution small business owners and managers are seeking this high value reference combines 8 content rich mini books into one complete package providing the answers you need to get the most out of the 2024 version of quickbooks

quickbooks 2022 all in one for dummies apple books - Feb 17 2022
web quickbooks makes it quick to do your books and quickbooks 2022 all in one for dummies makes it easy the leading small business accounting software will become your best friend helping you cut costs no more expensive financial services and

save time with all your accounting and payroll info in one place

46 free quickbooks tutorials learn quickbooks fast video - May 03 2023

web nov 3 2022 welcome to fit small business free quickbooks online tutorials each provides an in depth lesson complete with text examples and a comprehensive video demonstration designed to help you better understand how to

quickbooks 2012 for dummies cheat sheet for dummies - Jul 05 2023

web from quickbooks 2012 for dummies by stephen l nelson quickbooks 2012 makes small business accounting fast and easy but your day to day business bookkeeping will go even smoother if you employ a handful of quickbooks keyboard shortcuts along with data entry and interface tricks

quickbooks books dummies - Oct 28 2022

web quickbooks online for dummies your one stop guide to taking your books into the cloud quickbooks online for dummies 2024 edition is the go to for cloud based small business accounting online accounting could be saving you time and money

quickbooks 2012 for dummies on apple books - Sep 26 2022

web jan 11 2012 this eagerly awaited book shows you how to use this popular software to build a budget process payroll create invoices manage inventory balance accounts and much more all without having to hire expensive financial professionals

quickbooks 2022 all in one for dummies google books - Nov 28 2022

web dec 9 2021 stephen l nelson john wiley sons dec 9 2021 computers 640 pages the soup to nuts quickbooks reference that will make your small business life so much simpler quickbooks makes it quick

quickbooks 2012 for dummies wiley - Apr 02 2023

web quickbooks 2012 for dummies is a big help for small businesses most businesses cant afford a big four accounting firm to handle their books thats why so many small to mid size businesspeople turn to quickbooks to help them keep track of their finances

quickbooks 2012 for dummies stephen l nelson google books - Sep 07 2023

web veteran author stephen nelson updates his perennial bestseller and offers you easy to understand coverage of the newest release of quickbooks enables you to take control of managing your own

quickbooks online for dummies 2023 edition wiley - Apr 21 2022

web quickbooks online for dummies is the go to for cloud based small business accounting online accounting could be saving you time and money

quickbooks 2012 for dummies pdf free download epdf tips - Oct 08 2023

web 1 choose banking use register alternatively click the register icon in the banking section on the home page the register

appears as shown in figure 6 3 if you have more than

quickbooks 2012 for dummies guide books acm digital library - Mar 01 2023

web this eagerly awaited book shows you how to use this popular software to build a budget process payroll create invoices manage inventory balance accounts and much moreall without having to hire expensive financial professionals after discovering the best way to install and setup quickbooks the authors show you how to use quickbooks to

quickbooks online for dummies david h ringstrom google books - Dec 30 2022

web oct 18 2022 manage your accounting or bookkeeping practice with ease with the free quickbooks online accountant version this book is perfect for small business owners managers and employees who utilize quickbooks online and would like more fluid access to their business accounting

quickbooks 2012 for dummies 2012 edition open library - Aug 06 2023

web quickbooks 2012 for dummies by stephen l nelson 2012 wiley sons incorporated john edition in english

quickbooks 2012 for dummies 2012 edition open library - Jun 04 2023

web quickbooks 2012 for dummies by stephen l nelson 2012 wiley edition in english uk ed

quickbooks 2024 all in one for dummies cheat sheet - May 23 2022

web oct 31 2023 quickbooks 2024 all in one for dummies explore book buy on amazon quickbooks 2024 makes small business accounting fast and easy but your day to day business bookkeeping will go even more smoothly if you employ a handful of quickbooks user interface tricks editing tricks and keyboard shortcuts

quickbooks 2022 all in one for dummies wiley - Jun 23 2022

web quickbooks makesit quick to do your books andquickbooks 2022 all in one for dummiesmakes it easy the leading small business accounting software will become your best friend helping you cut costs no more expensive financial services and save time with all your accounting and payroll info in one place

quickbooks premier edition 2012 22 0 download free trial - Mar 21 2022

web jan 24 2023 download popular programs drivers and latest updates easily quickbooks premier edition 2012 is a very powerful business tool features view customized sales and profitability reports run cost to complete job report track your balance sheet by class with an easy to access report access your inventory items all in one place with the

quickbooks 2012 for dummies guide books acm digital library - Jan 31 2023

web nov 1 2011 after a quick review of bookkeeping basics you ll discover how quickbooks can help you build the perfect budget process payroll simplify your tax return prep work create invoices manage inventory generate income statements balance accounts and much more you ll learn what you should do before you install and set up quickbooks

windows xp nin bütün hayatı chip online - Jun 12 2023

web nov 29 2011 windows xp 25 ekim 2001 de microsoft tarafından microsoft un şimdiye kadarki en iyi işletim sistemi sözcükleriyle tanıtılmıştı ancak tam 10 yıl sonra birçok kişi onu hala dünyanın en iyi işletim sistemi olarak görüyor windows xp nin bu kadar başarılı ve kalıcı olacağını çıktığı gün herhalde microsoft dahil hiç kimse tahmin edemezdi
windows xp Çıkış tarihi sürümleri Özellikleri ve daha fazlası - Mar 09 2023
web jul 7 2019 windows xp professional windows xp nin 64 bit sürümündeki tek tüketici sürümüdür ve genellikle windows xp professional x64 edition olarak adlandırılır windows xp nin diğer tüm sürümleri yalnızca 32 bit biçiminde kullanılabilir
windows xp editions service packs support more lifewire - Dec 06 2022
web jan 9 2023 one of the more popular editions was windows xp embedded often referred to as windows xpe windows xp professional was the only consumer version of the os available in a 64 bit version and is typically referred
windows xp vikipedi - Jul 13 2023
web windows xp microsoft tarafından geliştirilen windows nt işletim sistemi ailesinin önemli bir sürümüdür hem profesyonel kullanıcılar için geliştirilen windows 2000 in hem de genel kullanıcılar için geliştirilen windows me nin doğrudan ardılıydı 25 ekim 2001 de başlayan perakende satışlarla 24 ağustos 2001 de üretime sunuldu
windows xp wikipedia - Aug 14 2023
web these latest versions for windows xp include activesync 4 5 directx 9 0c june 7 2010 redistributable internet explorer 8 on windows xp service packs 2 and 3 internet explorer 6 sp1 and outlook express 6 sp1 on windows windows media format runtime and windows media player 11 on windows xp
windows xp editions wikipedia - Feb 08 2023
web windows xp which is the next version of windows nt after windows 2000 and the successor to the consumer oriented windows me has been released in several editions since its original release in 2001 windows xp is available in many languages 1 in addition add ons translating the user interface are also available for certain languages 2
windows xp professional x64 edition vikipedi - Jan 07 2023
web yazılım uyumluluğu windows xp professional x64 edition 32 bit yazılım yürütülmesine izin veren windows on windows 64 bit wow64 adlı bir teknoloji kullanmaktadır 5 İlk windows xp 64 bit edition da itanium mimarisi için kullanılmıştır
windows xp sürümleri vikipedi - Apr 10 2023
web windows xp professional in windows xp home edition dan tek farkı kurulum cd sinde sistem kurtarma özelliği olmasıdır windows xp media center edition değiştir kaynağı değiştir windows xp media center edition ilk olarak 2002 de çıkmıştır 2004 yılında media center 2004 2005 yılında ise windows xp media center 2005
windows xp support has ended microsoft support - May 11 2023
web what is windows xp end of support microsoft provided support for windows xp for the past 12 years but the time came

for us along with our hardware and software partners to invest our resources toward supporting more recent technologies so that we can continue to deliver great new experiences

windows xp desteği sona erdi microsoft desteği - Sep 15 2023

web windows xp destek sonu nedir microsoft windows xp için 12 yıl boyunca destek sundu ancak artık yeni ve harika deneyimler sunabilmek için donanım ve yazılım iş ortaklarımızla birlikte kaynaklarımızı daha yeni teknolojilere yatırma zamanımız geldi

anaconda navigator anaconda org - Feb 16 2023

web anaconda navigator is a desktop graphical user interface included in anaconda that allows you to launch applications and easily manage conda packages environments and channels without the need to use command line commands

downloads anaconda - Jul 21 2023

web download anaconda distribution version release date download for high performance distribution easily install 1 000 data science packages package management manage packages

anaconda org - Jun 20 2023

web anaconda org allows anyone to distribute their conda and standard python packages to the world we support package builders and their users individuals and organizations can manage and distribute software

anaconda python distribution wikipedia - Jan 15 2023

web anaconda com anaconda is a distribution of the python and r programming languages for scientific computing data science machine learning applications large scale data processing predictive analytics etc that aims to simplify package management and

installing on windows anaconda documentation - Mar 17 2023

web instead use anaconda software by opening anaconda navigator or the anaconda prompt from the start menu note as of anaconda distribution 2022 05 the option to add anaconda to the path environment variable during an

python anaconda org - May 19 2023

web to install this package run one of the following conda install c anaconda python description python is a widely used high level general purpose interpreted dynamic programming language

anaconda the world s most popular data science platform - Aug 22 2023

web from ai solutions to interactive visualizations anaconda is the world s preferred distribution for numerical and scientific computing more than 6 000 python libraries over 2 000 interoperable r packages built from source tamper free install anaconda

your first python program hello anaconda - Dec 14 2022

web command line installers for anaconda with python 3 on macos anaconda with python 2 on 64 bit linux anaconda with python 3 on 64 bit linux anaconda with python 2 on 32 bit linux anaconda with python 3 on 32 bit linux excel plug ins for anaconda frequently asked questions packages anaconda package lists r language packages for anaconda

installation anaconda documentation - Apr 18 2023

web apr 4 2023 as of 2023 04 04 license free use and redistribution under the terms of the eula for anaconda distribution operating system windows 10 or newer 64 bit macos 10 13 or linux including ubuntu redhat centos 7 and others

getting started with conda conda 23 7 5 dev89 documentation - Nov 13 2022

web conda is a powerful package manager and environment manager that you use with command line commands at the anaconda prompt for windows or in a terminal window for macos or linux this 20 minute guide to getting started with conda lets you try out the major features of conda