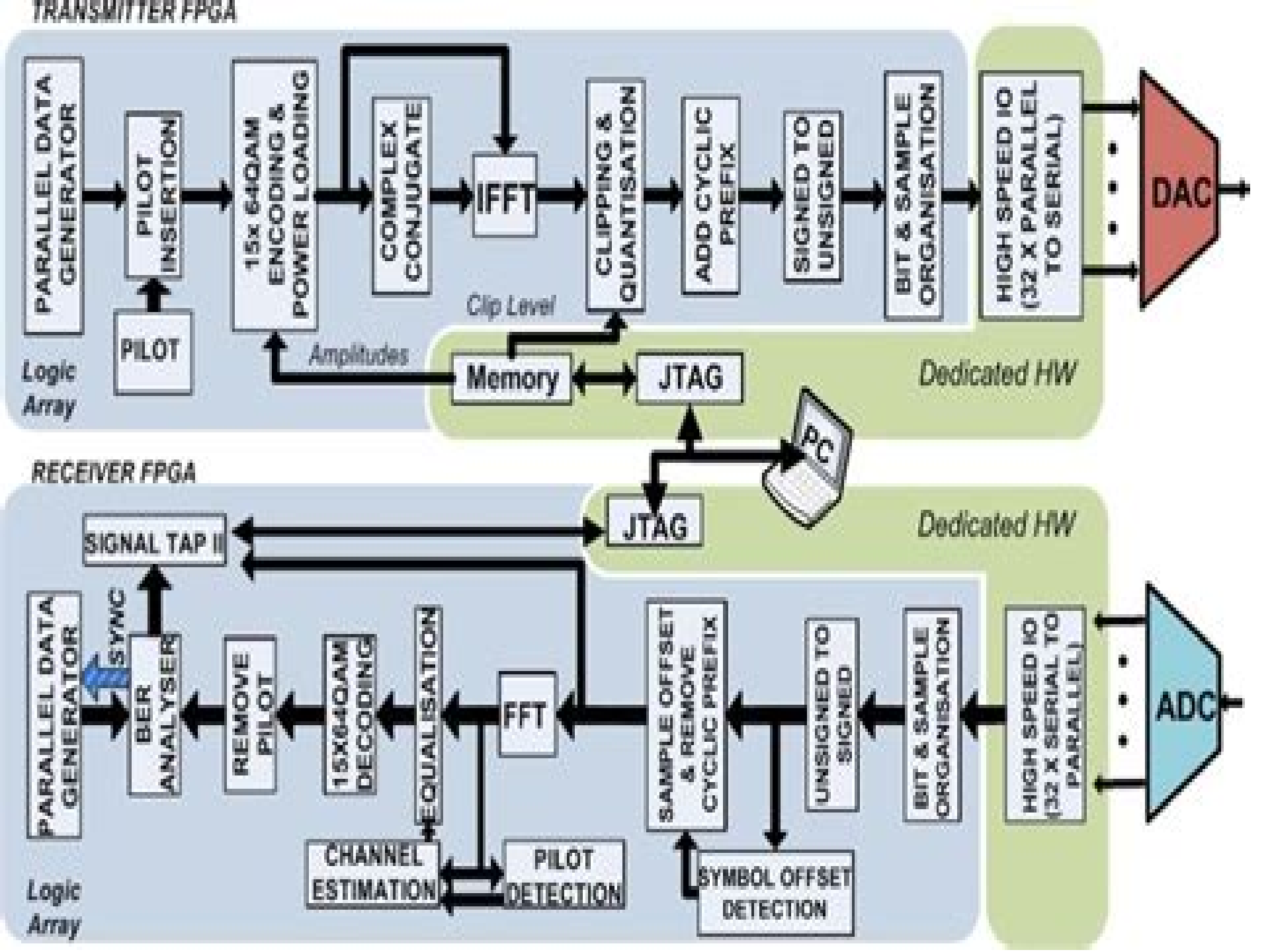
TRANSMITTER FPGA
PARALLEL DATA GENERATOR
PILOT INSERTION
PILOT
15x 64QAM ENCODING & POWER LOADING
COMPLEX CONJUGATE
IFFT
CLIPPING & QUANTISATION
ADD CYCLIC PREFIX
SIGNED TO UNSIGNED
BIT & SAMPLE ORGANISATION
HIGH SPEED IO (32 X PARALLEL TO SERIAL)
DAC
Clip Level
Amplitudes
Memory
JTAG
Logic Array
Dedicated HW
PC
RECEIVER FPGA
JTAG
Dedicated HW
SIGNAL TAP II
PARALLEL DATA GENERATOR
SYNC
BER ANALYSER
REMOVE PILOT
15X64QAM DECODING
EQUALISATION
FFT
SAMPLE OFFSET & REMOVE CYCLIC PREFIX
UNSIGNED TO SIGNED
BIT & SAMPLE ORGANISATION
HIGH SPEED IO (32 X SERIAL TO PARALLEL)
ADC
CHANNEL ESTIMATION
PILOT DETECTION
SYMBOL OFFSET DETECTION
Logic Array

Fpga Implementation Of An Lte Based Ofdm Transceiver For

Lingsheng Yao

Fpga Implementation Of An Lte Based Ofdm Transceiver For:

ICT for Intelligent Systems Jyoti Choudrie,Parikshit N. Mahalle,Thinagaran Perumal,Amit Joshi,2026-01-01 This book gathers papers addressing state of the art research in all areas of information and communication technologies and their applications in intelligent computing cloud storage data mining and software analysis It presents the outcomes of the 9th International Conference on Information and Communication Technology for Intelligent Systems ICTIS 2025 held in Bangkok Thailand The book discusses the fundamentals of various data analysis techniques and algorithms making it a valuable resource for researchers and practitioners alike **Heterogeneous Reconfigurable Processors for Real-Time Baseband Processing** Chenxin Zhang,Liang Liu,Viktor Öwall,2016-01-18 This book focuses on domain specific heterogeneous reconfigurable architectures demonstrating for readers a computing platform which is flexible enough to support multiple standards multiple modes and multiple algorithms The content is multi disciplinary covering areas of wireless communication computing architecture and circuit design The platform described provides real time processing capability with reasonable implementation cost achieving balanced trade offs among flexibility performance and hardware costs The authors discuss efficient design methods for wireless communication processing platforms from both an algorithm and architecture design perspective Coverage also includes computing platforms for different wireless technologies and standards including MIMO OFDM Massive MIMO DVB WLAN LTE LTE A and 5G **Network Security and Data Privacy in 6G Communication** Rajendra Kumar,Vishal Jain,Danish Ather,Vinay Kukreja,Manoj Singhal,2025-02-13 This book proposes robust solutions for securing a network against intrusions for data privacy and safety It includes theoretical models commercialization of validated models and case studies Explains the integration of technologies such as artificial intelligence the Internet of Things and blockchain for network security in a 6G communication system Highlights the challenges such as spectrum allocation and management network architecture and heterogeneity energy efficiency and sustainability antenna and radio frequency Discuss theories like quantum safe cryptography zero trust networking and blockchain based trust management Covers emerging technologies including homomorphic encryption secure multi party computation post quantum cryptography and distributed ledger technology for security and privacy in 6G communication systems Presents light and deep secure algorithms to detect fake incidents in wireless communication The text is primarily written for senior undergraduates graduate students and academic researchers in fields including electrical engineering electronics and communications engineering and computer science *5G Mobile Communications* Wei Xiang,Kan Zheng,Xuemin (Sherman) Shen,2016-10-13 This book provides a comprehensive overview of the emerging technologies for next generation 5G mobile communications with insights into the long term future of 5G Written by international leading experts on the subject this contributed volume covers a wide range of technologies research results and networking methods Key enabling technologies for 5G systems include but are not limited to millimeter wave communications massive MIMO technology and non orthogonal

multiple access 5G will herald an even greater rise in the prominence of mobile access based upon both human centric and machine centric networks Compared with existing 4G communications systems unprecedented numbers of smart and heterogeneous wireless devices will be accessing future 5G mobile systems As a result a new paradigm shift is required to deal with challenges on explosively growing requirements in mobile data traffic volume 1000x number of connected devices 10 100x typical end user data rate 10 100x and device network lifetime 10x Achieving these ambitious goals calls for revolutionary candidate technologies in future 5G mobile systems Designed for researchers and professionals involved with networks and communication systems 5G Mobile Communications is a straightforward easy to read analysis of the possibilities of 5G systems **Recursive Spatial Multiplexing** Thomas Edlich,2013 Cognitive Radio Oriented Wireless Networks Ingrid Moerman,Johann Marquez-Barja,Adnan Shahid,Wei Liu,Spilios Giannoulis,Xianjun Jiao,2019-01-08 This book constitutes the refereed proceedings of the 13th EAI International Conference on Cognitive Radio Oriented Wireless Networks CROWNCOM 2018 held in Ghent Belgium in September 2018 The 20 revised full papers were selected from 26 submissions The papers are organized thematically in tracks Experimental Licensed Shared Access and Dynamic Spectrum Access and PHX and Sensing **Signal Processing for 5G** Fa-Long Luo,Charlie Jianzhong Zhang,2016-08-11 A comprehensive and invaluable guide to 5G technology implementation and practice in one single volume For all things 5G this book is a must read Signal processing techniques have played the most important role in wireless communications since the second generation of cellular systems It is anticipated that new techniques employed in 5G wireless networks will not only improve peak service rates significantly but also enhance capacity coverage reliability low latency efficiency flexibility compatibility and convergence to meet the increasing demands imposed by applications such as big data cloud service machine to machine M2M and mission critical communications This book is a comprehensive and detailed guide to all signal processing techniques employed in 5G wireless networks Uniquely organized into four categories New Modulation and Coding New Spatial Processing New Spectrum Opportunities and New System level Enabling Technologies it covers everything from network architecture physical layer down link and up link protocols and air interface to cell acquisition scheduling and rate adaption access procedures and relaying to spectrum allocations All technology aspects and major roadmaps of global 5G standard development and deployments are included in the book Key Features Offers step by step guidance on bringing 5G technology into practice by applying algorithms and design methodology to real time circuit implementation taking into account rapidly growing applications that have multi standards and multi systems Addresses spatial signal processing for 5G in particular massive multiple input multiple output massive MIMO FD MIMO and 3D MIMO along with orbital angular momentum multiplexing 3D beamforming and diversity Provides detailed algorithms and implementations and compares all multicarrier modulation and multiple access schemes that offer superior data transmission performance including FBMC GFDM F OFDM UFMC SEFDM FTN MUSA SCMA and NOMA Demonstrates the translation of

signal processing theories into practical solutions for new spectrum opportunities in terms of millimeter wave full duplex transmission and license assisted access Presents well designed implementation examples from individual function block to system level for effective and accurate learning Covers signal processing aspects of emerging system and network architectures including ultra dense networks UDN software defined networks SDN device to device D2D communications and cloud radio access network C RAN **Design and FPGA Implementation of an OFDM System Based on 3GPP LTE Standard Over Multipath Fading Channel** Ahmed Almajdoob,2016 *Experimental Evaluation of Secondary NC-OFDM Transceiver for Coexistence with Primary Transmitter* Abhishek Bindiganavile,2012 RF Spectrum scarcity inhibits development of newer wireless communication technologies in a big way With the current spectrum policies there is heavy under utilization of available spectrum This calls for more efficient spectrum allocation One of the solutions to the problem is dynamic spectrum allocation algorithms This can be achieved with the use of Cognitive Radio Technology Cognitive radios allow for dynamic changing of transmission parameters depending on the environment and available spectrum bands The definition of Cognitive radios terms it an intelligent radio which alters its transmission reception parameters in accordance with the radio environment and the network state to utilize spectrum efficiently Cognitive radio technology allows for use of unlicensed secondary devices to utilize spectrum unused by licensed primary devices The secondary devices can utilize the spectrum and transmit in bands not used by the primary devices in order to avoid any detrimental interference to the licensed primary users This calls for stringent control of the secondary transceiver In this thesis we focus on designing an LTE standard based Non Contiguous Orthogonal Frequency Division Multiplexing Secondary Transceiver The major focus has been on hardware design of the secondary LTE transceiver and a system level implementation on a National Instruments based Real Time Embedded Controller platform with relevant design blocks developed on FPGA hardware for efficient implementation The various functionalities and tradeoffs involving hardware design of a transceiver have been studied In addition the effect of employing FPGA based design with a view of resource utilization and latency of the whole transceiver system has been considered Dynamic Spectrum Access setup was evaluated with the NI based secondary transceiver platform by evaluating the secondary receiver s performance in the presence of a primary user in the notch This allowed for efficient utilization of spectrum for the unlicensed secondary user without causing detrimental interference to the primary user s signal **An Initial Design of an OFDM Transceiver** Corey McKinney Thacker,2010 The initial design of an OFDM transceiver is described and the simulations using MATLAB s Simulink Software and other FGPA based tools are presented All components of a modern OFDM system were implemented in Simulink to provide an understanding of the various components of an OFDM system provide a proof of concept in the design and measure the theoretical performance of the system In an effort to build the transceiver the FFT and randomizer components were implemented in verilog and were successfully simulated using ModelSim Altera Starter Edition 6 5b A commercially available OFDM core which did not

include forward error correction was simulated to measure the performance of an OFDM system within Altera Stratix III devices and determine the overall logic utilization for OFDM modulation and demodulation The goals of this report are to describe in detail the general effort made by the author to build an OFDM transceiver and serve as a driver for its eventual FPGA implementation **Mobile Terminal Receiver Design** Sajal Kumar Das,2016-09-26 MOBILE TERMINAL RECEIVER DESIGN MOBILE TERMINAL RECEIVER DESIGN LTE and LTE Advanced IndiaThis all in one guide addresses the challenges of designing innovative mobile handset solutions that offer smaller size low power consumption low cost and tremendous flexibility with improved data rates and higher performance Readers are introduced to mobile phone system architecture and its basic building blocks different air interface standards and operating principles before progressing to hardware anatomy software and protocols and circuits for legacy and next generation smart phones including various research areas in 4G and 5G systems Mobile Terminal Receiver Design explains basic working principles system architecture and specification detailsof legacy and possible next generation mobile systems from principle to practiceto product covers in detail RF transmitter and receiver blocks digital baseband processingblocks receiver and transmitter signal processing protocol stack AGC AFC ATC power supply clocking features important topics like connectivity and application modules with differentdesign solutions for tradeoff exploration discusses multi RAT design requirements key design attributes such as low powerconsumption slim form factors seamless I RAT handover sensitivity and selectivity It will help software hardware and radio frequency design engineers to understand the evolution of radio access technologies and to design competitive and innovative mobile solutions and devices Graduates postgraduate students and researchers in mobile telecommunications disciplines will also find this book a handy reference Design and Implementation of Spectrally Precoded OFDM Transceiver Based on IEEE 802.16m □□□,2012 *Understanding LTE with MATLAB* Houman Zarrinkoub,2014-01-28 An introduction to technical details related to the Physical Layer of the LTE standard with MATLAB The LTE Long Term Evolution and LTE Advanced are among the latest mobile communications standards designed to realize the dream of a truly global fast all IP based secure broadband mobile access technology This book examines the Physical Layer PHY of the LTE standards by incorporating three conceptual elements an overview of the theory behind key enabling technologies a concise discussion regarding standard specifications and the MATLAB algorithms needed to simulate the standard The use of MATLAB a widely used technical computing language is one of the distinguishing features of this book Through a series of MATLAB programs the author explores each of the enabling technologies pedagogically synthesizes an LTE PHY system model and evaluates system performance at each stage Following this step by step process readers will achieve deeper understanding of LTE concepts and specifications through simulations Key Features Accessible intuitive and progressive one of the few books to focus primarily on the modeling simulation and implementation of the LTE PHY standard Includes case studies and testbenches in MATLAB which build knowledge gradually and incrementally until a functional specification for

the LTE PHY is attained Accompanying Web site includes all MATLAB programs together with PowerPoint slides and other illustrative examples Dr Houman Zarrinkoub has served as a development manager and now as a senior product manager with MathWorks based in Massachusetts USA Within his 12 years at MathWorks he has been responsible for multiple signal processing and communications software tools Prior to MathWorks he was a research scientist in the Wireless Group at Nortel Networks where he contributed to multiple standardization projects for 3G mobile technologies He has been awarded multiple patents on topics related to computer simulations He holds a BSc degree in Electrical Engineering from McGill University and MSc and PhD degrees in Telecommunications from the Institut Nationale de la Recherche Scientifique in Canada http www wiley com go zarrinkoub **Advanced Transceiver Design for Future OFDM Systems** Xiang Yuan,2009 Orthogonal frequency division multiplexing OFDM has become the foundation technique in modern broadband wireless communications such as wireless local area network WLAN IEEE 802 11a g n wireless metropolitan area network WiMAX IEEE 802 16 and cellular network long term evolution LTE and 4G However future OFDM systems see challenging problems associated with increased data rate and signal bandwidth requirement Signal with larger bandwidth not only leads to severer frequency domain channel fading but also imposes more constraints and challenges on hardware For example in multi band OFDM UWB systems where the bandwidth of signal is more than 500MHz analog to digital converter ADC becomes one of the bottlenecks of system development Spectrum efficiency becomes more important due to the scarce spectrum resource and increased bandwidth requirement OFDM improves spectrum efficiency by removing the guard band required in conventional frequency division systems however the temporal guarding interval used in OFDM is questioned as a factor that reduces spectrum efficiency Some alternative approaches have been investigated to reduce the overhead for example the pseudo random prefix PRP One better way of improving spectrum efficiency is to apply resource optimization techniques which assign system resources to users adaptively according to users link requirements and channel conditions Spatial division multiple access SDMA as an extension of the optimization technique to multi access systems exploits spacial redundancy and significantly increases system capacity This thesis investigates several solutions for these challenging problems with focus on addressing the difference between using zero padding and cyclic padding ADC solution for signals with extremely large bandwidth and joint design of transmit and receive beamforming for SDMA systems It is highlighted that timing error in zero padded OFDM system causes intercarrier interference which is very different to OFDM system with cyclic prefix where only phase rotation is arisen Frequency channelized ADC is proposed for OFDM systems with very large bandwidth and receiver baseband implementation including synchronization and equalization is studied The proposed receiver does not require a signal reconstruction module which was commonly needed in such systems Some novel joint beamforming design schemes are proposed within the framework of multiuser multiple input multiple output systems following minimum mean square error MMSE criterion In a SDMA system with codebook based channel feedback the

proposed schemes can efficiently mitigate the multiuser interference due to the channel quantization error and speed up the searching process significantly **Advanced Transceiver Algorithms for OFDM(A) Systems** Hisham A. Mahmoud,2009 ABSTRACT With the increasing advancements in the digital technology future wireless systems are promising to support higher data rates higher mobile speeds and wider coverage areas among other features While further technological developments allow systems to support higher computational complexity lower power consumption and employ larger memory units other resources remain limited One such resource which is of great importance to wireless systems is the available spectrum for radio communications To be able to support high data rate wireless applications there is a need for larger bandwidths in the spectrum Since the spectrum cannot be expanded studies have been concerned with fully utilizing the available spectrum One approach to achieve this goal is to reuse the available spectrum through space time frequency and code multiplexing techniques Another approach is to optimize the transceiver design as to achieve the highest throughput over the used spectrum From the physical layer perspective there is a need for a highly flexible and efficient modulation technique to carry the communication signal A multicarrier modulation technique known as orthogonal frequency division multiplexing OFDM is one example of such a technique OFDM has been used in a number of current wireless standards such as wireless fidelity WiFi and worldwide interoperability for microwave access WiMAX standards by the Institute of Electrical and Electronics Engineers IEEE and has been proposed for future 4G technologies such as the long term evolution LTE and LTE advanced standards by the 3rd Generation Partnership Project 3GPP and the wireless world initiative new radio WINNER standard by the Information society technologies IST This is due to OFDM s high spectral efficiency resistance to narrow band interference support for high data rates adaptivity and scalability In this dissertation OFDM and multiuser OFDM also known as orthogonal frequency division multiple access OFDMA techniques are investigated as a candidate for advanced wireless systems Features and requirements of future applications are discussed in detail and OFDM s ability to satisfy these requirements is investigated We identify a number of challenges that when addressed can improve the performance and throughput of OFDM based systems The challenges are investigated over three stages In the first stage minimizing or avoiding the interference between multiple OFDMA users as well as adjacent systems is addressed An efficient algorithm for OFDMA uplink synchronization that maintains the orthogonality between multiple users is proposed For adjacent channel interference a new spectrum shaping method is proposed that can reduce the out of band radiation of OFDM signals Both methods increase the utilization of available spectrum and reduce interference between different users In the second stage the goal is to maximize the system throughput for a given available bandwidth The OFDM system performance is considered under practical channel conditions and the corresponding bit error rate BER expressions are derived Based on these results the optimum pilot insertion rate is investigated In addition a new pilot pattern that improves the system ability to estimate and equalize various radio frequency RF impairments is proposed In the last stage

acquiring reliable measurements regarding the received signal is addressed Error vector magnitude EVM is a common performance metric that is being used in many of today s standards and measurement devices Inferring the signal to noise ratio SNR from EVM measurements has been investigated for either high SNR values or data aided systems We show that using current methods does not yield reliable estimates of the SNR under other conditions Thus we consider the relation between EVM and SNR for nondata aided systems We provide expressions that allow for accurate SNR estimation under various practical channel conditions Multi-Carrier and Spread Spectrum Systems Khaled Fazel,Stefan Kaiser,2008-11-03 The technological progress in multi carrier MC modulation led orthogonal frequency division multiplexing OFDM to become an important part of beyond 3G cellular mobile communication standards including LTE and WiMAX In addition the flexibility offered by the spread spectrum SS and time division multiplexing TDM techniques motivated many researchers to investigate several MC combined multiple access schemes such as MC CDMA OFDMA and MC TDMA These schemes benefit from the advantages of each sub system and offer high flexibility high spectral efficiency simple detection strategies and narrow band interference rejection capability Multi Carrier and Spread Spectrum Systems is one of the first books to describe and analyze the basic concepts of multi carrier OFDM transmission and its combination with spread spectrum MC CDMA The different architectures and detection strategies as well as baseband related transceiver components are explained This includes topics like FEC channel coding and decoding modulation and demodulation IFFT FFT digital I Q generation time and frequency synchronisation channel estimation frequency domain equalization and RF aspects such as phase noise and non linearity issues Concrete examples of its applications for cellular mobile communication systems B3G 4G are given Further derivatives of MC SS such as OFDMA SS MC MA and DFT spread OFDM and their corresponding applications in the LTE WiMAX WLAN and DVB RCT standards are detailed Capacity and flexibility enhancements of multi carrier OFDM systems by different MIMO diversity techniques such as space time frequency coding STC SFC and software defined radio concepts are also described Written in a highly accessible manner this book provides a unique reference on the topics of multi carrier and spread spectrum communications assisting 4G engineers with their implementation Fully updated new edition of successful text including two new chapters on LTE and WiMAX Describes in detail new applications of OFDM in mobile communication standards Examines all multi carrier spread spectrum schemes with in depth analysis from theory to practice Introduces the essentials of important wireless standards based on multi carrier spread spectrum techniques Block Transceivers Paulo Diniz,Wallace Martins,Markus Lima,2012-06-01 The demand for data traffic over mobile communication networks has substantially increased during the last decade As a result these mobile broadband devices spend the available spectrum fiercely requiring the search for new technologies In transmissions where the channel presents a frequency selective behavior multicarrier modulation MCM schemes have proven to be more efficient in terms of spectral usage than conventional modulations and spread spectrum techniques The orthogonal frequency division multiplexing OFDM is the most

popular MCM method since it not only increases spectral efficiency but also yields simple transceivers All OFDM based systems including the single carrier with frequency division equalization SC FD transmit redundancy in order to cope with the problem of interference among symbols This book presents OFDM inspired systems that are able to at most halve the amount of redundancy used by OFDM systems while keeping the computational complexity comparable Such systems herein called memoryless linear time invariant LTI transceivers with reduced redundancy require low complexity arithmetical operations and fast algorithms In addition whenever the block transmitter and receiver have memory and or are linear time varying LTV it is possible to reduce the redundancy in the transmission even further as also discussed in this book For the transceivers with memory it is possible to eliminate the redundancy at the cost of making the channel equalization more difficult Moreover when time varying block transceivers are also employed then the amount of redundancy can be as low as a single symbol per block regardless of the size of the channel memory With the techniques presented in the book it is possible to address what lies beyond the use of OFDM related solutions in broadband transmissions Table of Contents The Big Picture Transmultiplexers OFDM Memoryless LTI Transceivers with Reduced Redundancy FIR LTV Transceivers with Reduced Redundancy **Development of New Model for Multiwavelet-based OFDM Over Wireless Channel and Its Implementation in FPGA** Sameer Akram Dawood,2017 The goal of this research is to design simulate and analyze a new OFDM system based on a new transform called Discrete Multiwavelet Critical Sampling Transform DMWCST model 1 in order to enhance the performance and reduce the complexity compared with recent OFDM systems The performance of BER Signal to Noise Ratio SNR PAPR and computational complexity are taken into account in the scope of this work Furthermore the hardware implementation of the proposed model on an FPGA platform has also been conducted in this work Moreover two approaches are proposed to optimize the OFDM based on DMWCST OFDM DMWCST model 1 In the first approach model 2 a hybrid technique is proposed to develop a new model for OFDM DMWCST system This technique will be used to further improve the performance of OFDM DMWCST system and make it more suitable for outdoor wireless applications because it enables data to be transmitted at high rates with Doppler spread robustness *OFDM Baseband Transceiver Architecture Design and Implementation for IEEE 802.11a* □□□,2003 **Wireless Communication System Based Coded OFDM Transceiver** Majid Naghmash,Faeza A. Abid,2014-01 The design and implementation of capable constructing a new structure of RBF network equalizer based coded OFDM The importance of this design is to develop the conventional OFDM using channel estimator to compensate for the intersymbol interference ISI which suffers from multipath propagation and time varying channel especially with mobile communication The proposed structure solves the time varying multipath signal propagation problem using equalization at the receiver This requires and uses the channel coding to further protect transmitted data Coded OFDM combined with channel equalization is considered the most effective means for a frequency selective fading channel The research importance lies in using the radial basis function RBF network equalizer as a

classification problem where the idea is to map the received complex valued signal into desired binary values Results prove that the RBF network provides very good bit error rates with acceptable computational complexity

Unveiling the Magic of Words: A Review of "**Fpga Implementation Of An Lte Based Ofdm Transceiver For**"

In a world defined by information and interconnectivity, the enchanting power of words has acquired unparalleled significance. Their capability to kindle emotions, provoke contemplation, and ignite transformative change is actually awe-inspiring. Enter the realm of "**Fpga Implementation Of An Lte Based Ofdm Transceiver For**," a mesmerizing literary masterpiece penned with a distinguished author, guiding readers on a profound journey to unravel the secrets and potential hidden within every word. In this critique, we shall delve in to the book is central themes, examine its distinctive writing style, and assess its profound impact on the souls of its readers.

https://py.bijouxmedusa.com/book/publication/Documents/62%201418%20Weight%20Loss%20Step%20By%20Step%20America%2062%20645%20Weight%20Loss%20Step%20By%20Step.pdf

Table of Contents Fpga Implementation Of An Lte Based Ofdm Transceiver For

1. Understanding the eBook Fpga Implementation Of An Lte Based Ofdm Transceiver For
    - The Rise of Digital Reading Fpga Implementation Of An Lte Based Ofdm Transceiver For
    - Advantages of eBooks Over Traditional Books
2. Identifying Fpga Implementation Of An Lte Based Ofdm Transceiver For
    - Exploring Different Genres
    - Considering Fiction vs. Non-Fiction
    - Determining Your Reading Goals
3. Choosing the Right eBook Platform
    - Popular eBook Platforms
    - Features to Look for in an Fpga Implementation Of An Lte Based Ofdm Transceiver For
    - User-Friendly Interface
4. Exploring eBook Recommendations from Fpga Implementation Of An Lte Based Ofdm Transceiver For
    - Personalized Recommendations
    - Fpga Implementation Of An Lte Based Ofdm Transceiver For User Reviews and Ratings

- Fpga Implementation Of An Lte Based Ofdm Transceiver For and Bestseller Lists
5. Accessing Fpga Implementation Of An Lte Based Ofdm Transceiver For Free and Paid eBooks
    - Fpga Implementation Of An Lte Based Ofdm Transceiver For Public Domain eBooks
    - Fpga Implementation Of An Lte Based Ofdm Transceiver For eBook Subscription Services
    - Fpga Implementation Of An Lte Based Ofdm Transceiver For Budget-Friendly Options
6. Navigating Fpga Implementation Of An Lte Based Ofdm Transceiver For eBook Formats
    - ePub, PDF, MOBI, and More
    - Fpga Implementation Of An Lte Based Ofdm Transceiver For Compatibility with Devices
    - Fpga Implementation Of An Lte Based Ofdm Transceiver For Enhanced eBook Features
7. Enhancing Your Reading Experience
    - Adjustable Fonts and Text Sizes of Fpga Implementation Of An Lte Based Ofdm Transceiver For
    - Highlighting and Note-Taking Fpga Implementation Of An Lte Based Ofdm Transceiver For
    - Interactive Elements Fpga Implementation Of An Lte Based Ofdm Transceiver For
8. Staying Engaged with Fpga Implementation Of An Lte Based Ofdm Transceiver For
    - Joining Online Reading Communities
    - Participating in Virtual Book Clubs
    - Following Authors and Publishers Fpga Implementation Of An Lte Based Ofdm Transceiver For
9. Balancing eBooks and Physical Books Fpga Implementation Of An Lte Based Ofdm Transceiver For
    - Benefits of a Digital Library
    - Creating a Diverse Reading Collection Fpga Implementation Of An Lte Based Ofdm Transceiver For
10. Overcoming Reading Challenges
    - Dealing with Digital Eye Strain
    - Minimizing Distractions
    - Managing Screen Time
11. Cultivating a Reading Routine Fpga Implementation Of An Lte Based Ofdm Transceiver For
    - Setting Reading Goals Fpga Implementation Of An Lte Based Ofdm Transceiver For
    - Carving Out Dedicated Reading Time
12. Sourcing Reliable Information of Fpga Implementation Of An Lte Based Ofdm Transceiver For
    - Fact-Checking eBook Content of Fpga Implementation Of An Lte Based Ofdm Transceiver For
    - Distinguishing Credible Sources

13. Promoting Lifelong Learning
    - Utilizing eBooks for Skill Development
    - Exploring Educational eBooks
14. Embracing eBook Trends
    - Integration of Multimedia Elements
    - Interactive and Gamified eBooks

Fpga Implementation Of An Lte Based Ofdm Transceiver For Introduction

In the digital age, access to information has become easier than ever before. The ability to download Fpga Implementation Of An Lte Based Ofdm Transceiver For has revolutionized the way we consume written content. Whether you are a student looking for course material, an avid reader searching for your next favorite book, or a professional seeking research papers, the option to download Fpga Implementation Of An Lte Based Ofdm Transceiver For has opened up a world of possibilities. Downloading Fpga Implementation Of An Lte Based Ofdm Transceiver For provides numerous advantages over physical copies of books and documents. Firstly, it is incredibly convenient. Gone are the days of carrying around heavy textbooks or bulky folders filled with papers. With the click of a button, you can gain immediate access to valuable resources on any device. This convenience allows for efficient studying, researching, and reading on the go. Moreover, the cost-effective nature of downloading Fpga Implementation Of An Lte Based Ofdm Transceiver For has democratized knowledge. Traditional books and academic journals can be expensive, making it difficult for individuals with limited financial resources to access information. By offering free PDF downloads, publishers and authors are enabling a wider audience to benefit from their work. This inclusivity promotes equal opportunities for learning and personal growth. There are numerous websites and platforms where individuals can download Fpga Implementation Of An Lte Based Ofdm Transceiver For. These websites range from academic databases offering research papers and journals to online libraries with an expansive collection of books from various genres. Many authors and publishers also upload their work to specific websites, granting readers access to their content without any charge. These platforms not only provide access to existing literature but also serve as an excellent platform for undiscovered authors to share their work with the world. However, it is essential to be cautious while downloading Fpga Implementation Of An Lte Based Ofdm Transceiver For. Some websites may offer pirated or illegally obtained copies of copyrighted material. Engaging in such activities not only violates copyright laws but also undermines the efforts of authors, publishers, and researchers. To ensure ethical downloading, it is advisable to utilize reputable websites that prioritize the legal distribution of content. When downloading Fpga Implementation Of An Lte Based Ofdm Transceiver For, users should also consider the potential security risks associated with online platforms. Malicious actors may exploit

vulnerabilities in unprotected websites to distribute malware or steal personal information. To protect themselves, individuals should ensure their devices have reliable antivirus software installed and validate the legitimacy of the websites they are downloading from. In conclusion, the ability to download Fpga Implementation Of An Lte Based Ofdm Transceiver For has transformed the way we access information. With the convenience, cost-effectiveness, and accessibility it offers, free PDF downloads have become a popular choice for students, researchers, and book lovers worldwide. However, it is crucial to engage in ethical downloading practices and prioritize personal security when utilizing online platforms. By doing so, individuals can make the most of the vast array of free PDF resources available and embark on a journey of continuous learning and intellectual growth.

FAQs About Fpga Implementation Of An Lte Based Ofdm Transceiver For Books

How do I know which eBook platform is the best for me? Finding the best eBook platform depends on your reading preferences and device compatibility. Research different platforms, read user reviews, and explore their features before making a choice. Are free eBooks of good quality? Yes, many reputable platforms offer high-quality free eBooks, including classics and public domain works. However, make sure to verify the source to ensure the eBook credibility. Can I read eBooks without an eReader? Absolutely! Most eBook platforms offer web-based readers or mobile apps that allow you to read eBooks on your computer, tablet, or smartphone. How do I avoid digital eye strain while reading eBooks? To prevent digital eye strain, take regular breaks, adjust the font size and background color, and ensure proper lighting while reading eBooks. What the advantage of interactive eBooks? Interactive eBooks incorporate multimedia elements, quizzes, and activities, enhancing the reader engagement and providing a more immersive learning experience. Fpga Implementation Of An Lte Based Ofdm Transceiver For is one of the best book in our library for free trial. We provide copy of Fpga Implementation Of An Lte Based Ofdm Transceiver For in digital format, so the resources that you find are reliable. There are also many Ebooks of related with Fpga Implementation Of An Lte Based Ofdm Transceiver For. Where to download Fpga Implementation Of An Lte Based Ofdm Transceiver For online for free? Are you looking for Fpga Implementation Of An Lte Based Ofdm Transceiver For PDF? This is definitely going to save you time and cash in something you should think about.

Find Fpga Implementation Of An Lte Based Ofdm Transceiver For :

62-1418 weight loss step by step America 62-645 weight loss step by step
productivity hacks explained for startups 62-521 productivity hacks for

tech roadmap for entrepreneurs 62-2292 smart home tech roadmap for
business tips United States 62-2338 online business tips for creators
~~62-1148 budget travel checklist America 62-19 budget travel comparison~~
freelancing online explained for small business 62-2905 freelancing
marketing examples for small business 62-2571 content marketing examples
for small business 62-2889 VPN services trends United States 62-2884 VPN
marketing step by step United States 62-1182 AI marketing step by step
~~small business 62-759 small business ideas comparison United States~~
62-375 retirement planning roadmap for startups 62-2364 retirement
62-1923 freelancing online best practices for small business 62-1836
trading review for creators 62-834 crypto trading review for small
explained for creators 62-514 data science careers for beginners America
AI marketing tutorial for creators 62-2148 AI marketing tutorial for

Fpga Implementation Of An Lte Based Ofdm Transceiver For :

quantile regression cambridge university press assessment - Feb 11 2023
web quantile regression roger koenker p cm econometric society monographs no 38 includes bibliographical references and index isbn 0 521 84573 4 hardcover isbn 0 521 60827 9 pbk 1 regression analysis 2 mathematical statistics i title ii series qa278 2 k64 2005 519 5 36 dc22 2004027656 isbn 13 978 0 521 84573 1
quantile regression econometric society monographs book 38 - May 14 2023
web may 5 2005 quantile regression econometric society monographs book 38 kindle edition by koenker roger download it once and read it on your kindle device pc phones or tablets use features like bookmarks note taking and highlighting while reading quantile regression econometric society monographs book 38
quantile regression econometric society monographs series - Dec 09 2022
web may 5 2005 quantile regression econometric society monographs series number 38 quantile regression is gradually emerging as a unified statistical methodology for estimating models of conditional quantile functions
monographs in print the econometric society - Sep 06 2022
web the econometric society monograph series contains research in the fields of economic theory econometrics and quantitative economics the editors of the monograph series appointed by the econometric society hold responsibility for the review process and the decision to publish a monograph in the series

quantile regression econometrics statistics and mathematical - Mar 12 2023
web quantile regression is gradually emerging as a unified statistical methodology for estimating models of conditional quantile functions this monograph is the first comprehensive treatment of the subject encompassing models that are linear and nonlinear parametric and nonparametric
quantile regression cambridge university press assessment - Jun 15 2023
web by complementing the exclu sive focus of classical least squares regression on the conditional mean quantile regression offers a systematic strategy for examining how covariates influence the location scale and shape of the entire response distribution
decentralization estimators for instrumental econometric - Nov 08 2022
web may 1 2021 monographs online paper length guidance regional activities meetings journal of the econometric society edited by stéphane bonhomme print issn 1759 7323 online issn 1759 7331 the instrumental variable quantile regression ivqr model chernozhukov and hansen 2005 is a popular tool for estimating causal
quantile regression econometric society monographs band 38 - Jun 03 2022
web quantile regression econometric society monographs band 38 koenker roger isbn 9780521608275 kostenloser versand für alle bücher mit versand und verkauf duch amazon
quantile regression econometric society monographs 2022 - Feb 28 2022
web quantile regression econometric society monographs is available in our digital library an online access to it is set as public so you can download it instantly our book servers hosts in multiple locations allowing you to get the most less latency time to download any of our books like this one
modeling environmental pollution using varying coefficients - May 02 2022
web oct 17 2023 many phenomena can be described by random variables that follow asymmetrical distributions in the context of regression when the response variable y follows such a distribution it is preferable to estimate the response variable for predictor values using the conditional median quantile regression models can be employed for
quantile regression cambridge university press assessment - Sep 18 2023
web quantile regression is gradually emerging as a unified statistical methodology for estimating models of conditional quantile functions by complementing the exclusive focus of classical least squares regression on the conditional mean quantile regression offers a systematic strategy for examining how covariates influence the location scale and shape
koenker r 2005 quantile regression econometric society - Apr 01 2022
web quantile regression based on semi competing risks data jin jian hsieh a adam ding weijing wang yu lin chi open journal of statistics vol 3 no 1 february 20 2013

quantile regression 38 econometric society monographs - Oct 07 2022
web quantile regression is gradually emerging as a unified statistical methodology for estimating models of conditional quantile functions by complementing the exclusive focus of classical least squares regression on the conditional mean quantile regression offers a systematic strategy for examining how covariates influence the location scale
quantile regression roger koenker google books - Jan 10 2023
web may 5 2005 quantile regression is gradually emerging as a unified statistical methodology for estimating models of conditional quantile functions this monograph is the first comprehensive treatment of
quantile regression econometric society monographs 2023 - Jan 30 2022
web quantile regression econometric society monographs econometric society monographs in pure theory feb 03 2022 contribution to the pure theory of taxation oct 19 2020 this book investigates the way in which tax systems affect economic efficiency and the distribution of welfare
quantile regression econometric society monographs 38 - Aug 17 2023
web may 9 2005 description quantile regression is gradually emerging as a unified statistical methodology for estimating models of conditional quantile functions this monograph is the first comprehensive treatment of the subject encompassing models that are linear and nonlinear parametric and nonparametric
econometric society monographs cambridge university - Apr 13 2023
web the econometric society monographs series is designed to promote the publication of original research contributions of high quality in economic theory and theoretical and applied econometrics the editors of the monographs series now welcome focused manuscripts of 100 to 150 pages that treat or survey cutting edge or perennially important topics
quantile regression econometric society monographs - Jul 16 2023
web may 9 2005 created by an anonymous user imported from amazon com record quantile regression econometric society monographs by roger koenker may 9 2005 cambridge university press edition hardcover in english
asymptotic theory for nonlinear quantile - Jul 04 2022
web mar 23 2015 asymptotic theory for nonlinear quantile regression under weak dependence volume 32 issue 3 2005 quantile regression econometric society monographs no 38 cambridge university press crossref google scholar koenker r bassett g 1978 regression quantiles
quantile regression 38 econometric society monographs - Aug 05 2022
web may 5 2005 buy quantile regression 38 econometric society monographs series number 38 illustrated by koenker roger isbn 9780521845731 from amazon s book store everyday low prices and free delivery on eligible orders
esercizi unit 6 new english file intermediate - Feb 08 2023

web new english file pre intermediate unit 6 slideshare free download here pdfsdocuments2 com new english file intermediate test unit 6 kleru26 de pre

esercizi unit 6 new english file intermediate pdf uniport edu - Jul 13 2023

web apr 27 2023 esercizi unit 6 new english file intermediate 2 6 downloaded from uniport edu ng on april 27 2023 by guest practice activities cef a1 c1 face2face

esercizi unit 6 new english file intermediate pdf - Jan 07 2023

web jun 21 2023 esercizi unit 6 new english file intermediate pdf web apr 27 2023 unit allows students to learnand practice new vocabulary culture bank includes 9 ready to

esercizi unit 6 new english file intermediate uniport edu - May 31 2022

web may 28 2023 esercizi unit 6 new english file intermediate 2 6 downloaded from uniport edu ng on may 28 2023 by guest detective sherlock holmes originally

esercizi unit 6 new english file intermediate pdf uniport edu - Mar 29 2022

web apr 6 2023 6 2023 by guest esercizi unit 6 new english file intermediate right here we have countless book esercizi unit 6 new english file intermediate and collections

esercizi unit 6 new english file intermediate pdf uniport edu - Jun 12 2023

web mar 23 2023 esercizi unit 6 new english file intermediate 2 6 downloaded from uniport edu ng on march 23 2023 by guest essential idioms in english robert james

english file learning resources oxford university press - Aug 14 2023

web english file student s site learn more english here with interactive exercises useful downloads games and weblinks practise your grammar vocabulary pronunciation

esercizi unit 6 new english file intermediate donate pfi org - Jul 01 2022

web esercizi unit 6 new english file intermediate esercizi unit 6 new english file intermediate 2 downloaded from donate pfi org on 2020 05 13 by guest 2008 12 04

esercizi unit 6 new english file intermediate 2023 - Feb 25 2022

web mar 3 2023 just when you thought it couldn t get any better a new edition of the best selling english file the best way to get your students talking a blend of completely

esercizi unit 6 new english file intermediate liululu - Mar 09 2023

web esercizi unit 6 new english file intermediate esercizi unit 6 new english file intermediate english test unit 8 pre intermediate study sets and new english file

esercizi unit 6 new english file intermediate ol wise edu - May 11 2023

web esercizi unit 6 new english file intermediate is easy to use in our digital library an online entrance to it is set as public thus you can download it instantly our digital library saves

esercizi unit 6 new english file intermediate uniport edu - Oct 04 2022

web esercizi unit 6 new english file intermediate 2 6 downloaded from uniport edu ng on september 12 2023 by guest extra activities section answer key and tapescripts

esercizi unit 6 new english file intermediate - Dec 06 2022

web feb 25 2023 esercizi unit 6 new english file intermediate this is likewise one of the factors by obtaining the soft documents of this esercizi unit 6 new english file

esercizi unit 6 new english file intermediate uniport edu - Aug 02 2022

web mar 24 2023 target to download and install the esercizi unit 6 new english file intermediate it is totally simple then previously currently we extend the partner to

6 sınıf İngilizce 6 Ünite test pdf deneme sınavı İndir Çöz - Apr 29 2022

web 6 sinif İngİlİzce 6 ÜnİteTest İndİr by haktan baĞiŞ kirkkeselİ cevap anahtari 1 b 2 d 3 a 4 b 5 c 6 c 7 a 8 b 9 d 10 d Şunlara da göz atmayı unutmayın

esercizi unit 6 new english file intermediate copy uniport edu - Apr 10 2023

web apr 22 2023 esercizi unit 6 new english file intermediate 2 6 downloaded from uniport edu ng on april 22 2023 by guest english vocabulary profile meaning students

esercizi unit 6 new english file intermediate copy ci kubesail - Sep 03 2022

web bulletin of the international railway congress association english edition esercizi unit 6 new english file intermediate downloaded from ci kubesail com by guest hudson

esercizi unit 6 new english file intermediate - Dec 26 2021

web 1 3 a english file upper intermediate new english file intermediate online new english file pre intermediate unit 6 slideshare new english file intermediate

6 sinif İngİlİzce 3 ÜnİteDowntown ingilizceciyiz com - Oct 24 2021

web değerli İngilizce Öğretmenim ve sevgili Öğrenciler sitemizde 6 sınıf İngilizce 3 ünite kelimeleri konu anlatımı çalışma kağıtları ve testleri bulabilirsiniz 2023 2024 eğitim

esercizi unit 6 new english file intermediate - Jan 27 2022

web new english file pre intermediate unit 6 slideshare answer key oup hu new english file upper intermediate test unit 7 new english file upper

new english file upper intermediate test unit 6 - Nov 05 2022

web may 2 2015 new english file upper intermediate test unit 5 new english file upper intermediate test unit 7 2 responses to new

esercizi unit 6 new english file intermediate - Nov 24 2021

web aug 30 2023 esercizi unit 6 new english file intermediate new english file intermediate unit 1 proprofs quiz new english file intermediate unit 5 6 scribd com

knights and armor coloring book dover fashion - Oct 09 2023

web buy knights and armour colouring book dover fashion coloring book illustrated by smith a g isbn 0800759248438 from amazon s book store everyday low prices

knights and armor coloring book knights in armor - Nov 29 2022

web description details q a reviews category description for dover historical coloring books several of these are already listed separately in appropriate places in this

knights armor coloring book united art education - Dec 31 2022

web knights and armour colouring book dover fashion coloring book smith a g amazon in books

knights and armor coloring book dover fashion coloring book - May 24 2022

web knights and armor coloring book isbn 0486248437 ean13 9780486248431 language english release date may 1 1985 pages 48 dimensions 0 2 h x 10 7 l

knights and armor coloring book by a g smith - Sep 08 2023

web product description product details you can recapture the excitement of yesteryear s noblest battles with this remarkable pageant of dauntless knights and armor in

steam coloring pixels medieval pack - Nov 17 2021

knights and armor coloring book dover publications - Jun 24 2022

web with this book large coloring images of knights on horses knights with armor castles mansions and princesses too this activity book for young kids will keep them engaged

knights armor abebooks - Feb 18 2022

knights armor coloring book by smith abebooks - Sep 27 2022

web historically accurate renderings of vikings crusaders italian condottiere spanish foot soldiers and luminaries such as richard the lion hearted and henry the viii document

coloring page knight in armor edupics com - Oct 17 2021

knights and armour colouring book dover fashion - Aug 07 2023
web knights and armor coloring book a g smith courier corporation jan 1 1985 juvenile nonfiction 48 pages historically accurate renderings of vikings crusaders
pdf knights and armour colouring book academia edu - Mar 22 2022
web coloring page knight in armor coloring picture knight in armor free coloring sheets to print and download images for schools and education teaching materials img 9442
medieval knights in armor coloring book for kids and adults - Mar 02 2023
web knights and armor coloring book dover fashion coloring book by a g smith and a great selection of related books art and collectibles available now at abebooks com
knights and armor coloring help environment harvard edu - Jan 20 2022

knights and armor coloring book a g smith google books - Jun 05 2023
web you can recapture the excitement of yesteryear s noblest battles with this remarkable pageant of dauntless knights and armor in coloring book form defend
knights and armor coloring book dover books - May 04 2023
web 42 reproducible illustrations of warriors knights and the range of protective armor in use in europe from a d 100 to 1640 printed on bright white heavyweight paper that accepts
knights and armour colouring book dover fashion coloring - Jul 26 2022
web knights and armor coloring book dover fashion coloring book by a g smith and a great selection of related books art and collectibles available now at abebooks co uk
9780486248431 knights and armour colouring book dover - Oct 29 2022
web knights and armor coloring book dover fashion coloring book by a g smith isbn 10 0486248437 isbn 13 9780486248431 dover publications 1985 softcover
knights and armor coloring book amazon ca - Apr 03 2023
web knights and armor coloring book dover fashion coloring book by a g smith and a great selection of related books art and collectibles available now at abebooks co uk
knights and armour colouring book dover fashion coloring - Apr 22 2022
web this medieval themed book unlocks 20 additional levels for coloring pixels experience romanticised european history at its finest with this book from knights and armour
buy knights and armor coloring book book by a g smith - Dec 19 2021

knights and armor coloring book dover fashion coloring book - Aug 27 2022
web knights and armour colouring book see full pdf download pdf see full pdf download pdf related papers making an edition in an app barbara bordalejo
knights and armor coloring book dover publications - Jul 06 2023
web sep 18 2014 the medieval knights in armor coloring book for kids and adults is full of medieval knights anyone who loves knights and jousting will love the armor clad
knights and armor coloring book paperback barnes noble - Feb 01 2023
web more than 40 dramatic plates specially designed for you to color portray the wide range of protective armor in use in europe from about a d 100 to 1640 the attire of vikings