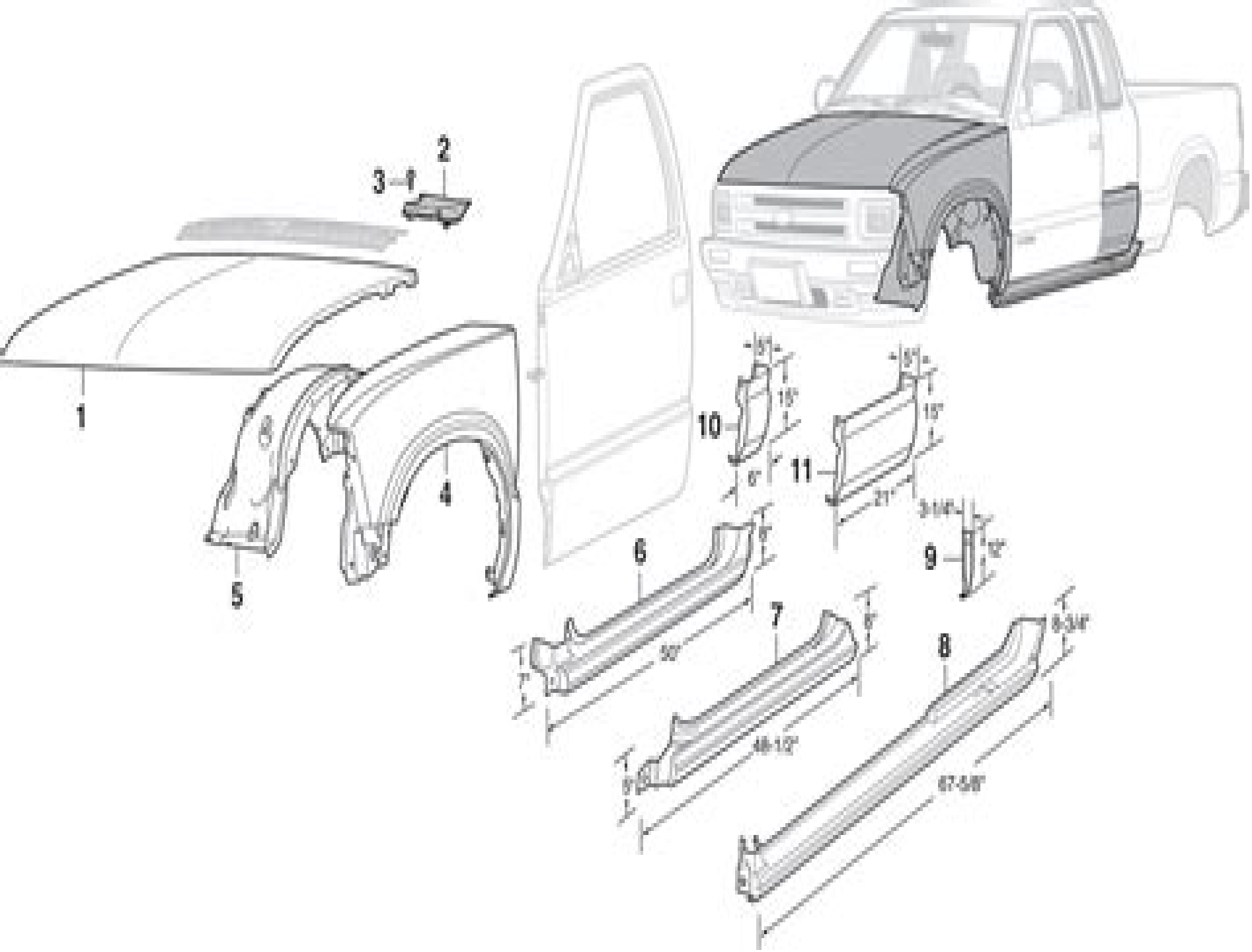
1
2
3
4
5
6
7
8
9
10
11
19"
6"
21"
3-1/4"
12"
30"
48-1/2"
67-5/8"
8-3/4"

Chevrolet S10 Repair

Brendan G. Carr

Chevrolet S10 Repair:

Thank you totally much for downloading **Chevrolet S10 Repair**.Maybe you have knowledge that, people have see numerous period for their favorite books in the same way as this Chevrolet S10 Repair, but end happening in harmful downloads.

Rather than enjoying a fine PDF later a cup of coffee in the afternoon, then again they juggled later than some harmful virus inside their computer. **Chevrolet S10 Repair** is understandable in our digital library an online permission to it is set as public so you can download it instantly. Our digital library saves in compound countries, allowing you to acquire the most less latency time to download any of our books afterward this one. Merely said, the Chevrolet S10 Repair is universally compatible considering any devices to read.

https://py.bijouxmedusa.com/public/browse/HomePages/33%20464%20Crypto%20Trading%20Examples%20For%20Startups%2033%20516%20Crypto%20Trading.pdf

Table of Contents Chevrolet S10 Repair

1. Understanding the eBook Chevrolet S10 Repair
    - The Rise of Digital Reading Chevrolet S10 Repair
    - Advantages of eBooks Over Traditional Books
2. Identifying Chevrolet S10 Repair
    - Exploring Different Genres
    - Considering Fiction vs. Non-Fiction
    - Determining Your Reading Goals
3. Choosing the Right eBook Platform
    - Popular eBook Platforms
    - Features to Look for in an Chevrolet S10 Repair
    - User-Friendly Interface
4. Exploring eBook Recommendations from Chevrolet S10 Repair
    - Personalized Recommendations
    - Chevrolet S10 Repair User Reviews and Ratings

    - Chevrolet S10 Repair and Bestseller Lists
5. Accessing Chevrolet S10 Repair Free and Paid eBooks
    - Chevrolet S10 Repair Public Domain eBooks
    - Chevrolet S10 Repair eBook Subscription Services
    - Chevrolet S10 Repair Budget-Friendly Options
6. Navigating Chevrolet S10 Repair eBook Formats
    - ePub, PDF, MOBI, and More
    - Chevrolet S10 Repair Compatibility with Devices
    - Chevrolet S10 Repair Enhanced eBook Features
7. Enhancing Your Reading Experience
    - Adjustable Fonts and Text Sizes of Chevrolet S10 Repair
    - Highlighting and Note-Taking Chevrolet S10 Repair
    - Interactive Elements Chevrolet S10 Repair
8. Staying Engaged with Chevrolet S10 Repair
    - Joining Online Reading Communities
    - Participating in Virtual Book Clubs
    - Following Authors and Publishers Chevrolet S10 Repair
9. Balancing eBooks and Physical Books Chevrolet S10 Repair
    - Benefits of a Digital Library
    - Creating a Diverse Reading Collection Chevrolet S10 Repair
10. Overcoming Reading Challenges
    - Dealing with Digital Eye Strain
    - Minimizing Distractions
    - Managing Screen Time
11. Cultivating a Reading Routine Chevrolet S10 Repair
    - Setting Reading Goals Chevrolet S10 Repair
    - Carving Out Dedicated Reading Time
12. Sourcing Reliable Information of Chevrolet S10 Repair
    - Fact-Checking eBook Content of Chevrolet S10 Repair
    - Distinguishing Credible Sources

13. Promoting Lifelong Learning
    - Utilizing eBooks for Skill Development
    - Exploring Educational eBooks
14. Embracing eBook Trends
    - Integration of Multimedia Elements
    - Interactive and Gamified eBooks

Chevrolet S10 Repair Introduction

Free PDF Books and Manuals for Download: Unlocking Knowledge at Your Fingertips In todays fast-paced digital age, obtaining valuable knowledge has become easier than ever. Thanks to the internet, a vast array of books and manuals are now available for free download in PDF format. Whether you are a student, professional, or simply an avid reader, this treasure trove of downloadable resources offers a wealth of information, conveniently accessible anytime, anywhere. The advent of online libraries and platforms dedicated to sharing knowledge has revolutionized the way we consume information. No longer confined to physical libraries or bookstores, readers can now access an extensive collection of digital books and manuals with just a few clicks. These resources, available in PDF, Microsoft Word, and PowerPoint formats, cater to a wide range of interests, including literature, technology, science, history, and much more. One notable platform where you can explore and download free Chevrolet S10 Repair PDF books and manuals is the internets largest free library. Hosted online, this catalog compiles a vast assortment of documents, making it a veritable goldmine of knowledge. With its easy-to-use website interface and customizable PDF generator, this platform offers a user-friendly experience, allowing individuals to effortlessly navigate and access the information they seek. The availability of free PDF books and manuals on this platform demonstrates its commitment to democratizing education and empowering individuals with the tools needed to succeed in their chosen fields. It allows anyone, regardless of their background or financial limitations, to expand their horizons and gain insights from experts in various disciplines. One of the most significant advantages of downloading PDF books and manuals lies in their portability. Unlike physical copies, digital books can be stored and carried on a single device, such as a tablet or smartphone, saving valuable space and weight. This convenience makes it possible for readers to have their entire library at their fingertips, whether they are commuting, traveling, or simply enjoying a lazy afternoon at home. Additionally, digital files are easily searchable, enabling readers to locate specific information within seconds. With a few keystrokes, users can search for keywords, topics, or phrases, making research and finding relevant information a breeze. This efficiency saves time and effort, streamlining the learning process and allowing individuals to focus on extracting the information they need. Furthermore, the availability of free PDF books and manuals fosters a culture of continuous learning. By removing

financial barriers, more people can access educational resources and pursue lifelong learning, contributing to personal growth and professional development. This democratization of knowledge promotes intellectual curiosity and empowers individuals to become lifelong learners, promoting progress and innovation in various fields. It is worth noting that while accessing free Chevrolet S10 Repair PDF books and manuals is convenient and cost-effective, it is vital to respect copyright laws and intellectual property rights. Platforms offering free downloads often operate within legal boundaries, ensuring that the materials they provide are either in the public domain or authorized for distribution. By adhering to copyright laws, users can enjoy the benefits of free access to knowledge while supporting the authors and publishers who make these resources available. In conclusion, the availability of Chevrolet S10 Repair free PDF books and manuals for download has revolutionized the way we access and consume knowledge. With just a few clicks, individuals can explore a vast collection of resources across different disciplines, all free of charge. This accessibility empowers individuals to become lifelong learners, contributing to personal growth, professional development, and the advancement of society as a whole. So why not unlock a world of knowledge today? Start exploring the vast sea of free PDF books and manuals waiting to be discovered right at your fingertips.

FAQs About Chevrolet S10 Repair Books

1. Where can I buy Chevrolet S10 Repair books? Bookstores: Physical bookstores like Barnes & Noble, Waterstones, and independent local stores. Online Retailers: Amazon, Book Depository, and various online bookstores offer a wide range of books in physical and digital formats.
2. What are the different book formats available? Hardcover: Sturdy and durable, usually more expensive. Paperback: Cheaper, lighter, and more portable than hardcovers. E-books: Digital books available for e-readers like Kindle or software like Apple Books, Kindle, and Google Play Books.
3. How do I choose a Chevrolet S10 Repair book to read? Genres: Consider the genre you enjoy (fiction, non-fiction, mystery, sci-fi, etc.). Recommendations: Ask friends, join book clubs, or explore online reviews and recommendations. Author: If you like a particular author, you might enjoy more of their work.
4. How do I take care of Chevrolet S10 Repair books? Storage: Keep them away from direct sunlight and in a dry environment. Handling: Avoid folding pages, use bookmarks, and handle them with clean hands. Cleaning: Gently dust the covers and pages occasionally.
5. Can I borrow books without buying them? Public Libraries: Local libraries offer a wide range of books for borrowing.

Book Swaps: Community book exchanges or online platforms where people exchange books.

6. How can I track my reading progress or manage my book collection? Book Tracking Apps: Goodreads, LibraryThing, and Book Catalogue are popular apps for tracking your reading progress and managing book collections. Spreadsheets: You can create your own spreadsheet to track books read, ratings, and other details.
7. What are Chevrolet S10 Repair audiobooks, and where can I find them? Audiobooks: Audio recordings of books, perfect for listening while commuting or multitasking. Platforms: Audible, LibriVox, and Google Play Books offer a wide selection of audiobooks.
8. How do I support authors or the book industry? Buy Books: Purchase books from authors or independent bookstores. Reviews: Leave reviews on platforms like Goodreads or Amazon. Promotion: Share your favorite books on social media or recommend them to friends.
9. Are there book clubs or reading communities I can join? Local Clubs: Check for local book clubs in libraries or community centers. Online Communities: Platforms like Goodreads have virtual book clubs and discussion groups.
10. Can I read Chevrolet S10 Repair books for free? Public Domain Books: Many classic books are available for free as theyre in the public domain. Free E-books: Some websites offer free e-books legally, like Project Gutenberg or Open Library.

Find Chevrolet S10 Repair :

~~33-464 crypto trading examples for startups 33-516 crypto trading~~
loss blueprint for startups 33-40 weight loss case study for creators
~~33-1658 dropshipping business software for small business 33-506~~
~~ideas for small business 33-1799 startup funding ideas for startups~~
~~for startups 33-1880 freelancing online examples United States 33-2808~~
remote jobs tips for creators 33-1843 remote jobs tips for creators
entrepreneurs 33-2497 career growth case study for small business
beginners for startups 33-1754 weight loss guide USA 33-1182 weight loss
chatbot development apps United States 33-2014 chatbot development apps
for beginners for startups 33-246 VPN services guide America 33-163 VPN
business 33-1415 cybersecurity explained for startups 33-1081
science careers explained for small business 33-1623 data science

roadmap USA 33-1376 weight loss roadmap USA 33-1684 weight loss roadmap
checklist America 33-2570 crypto investing checklist America 33-613
income ideas tips for creators 33-499 passive income ideas tips for

Chevrolet S10 Repair :

free cleaning service contract templates word pdf - Jun 13 2023
web a cleaning service contract is a legally binding agreement between a cleaning company or individual and their client it contains the terms and conditions of the agreement it highlights the scope of the work the payment amount the payment terms and the duration of the agreement
free cleaning service contract template pdf word eforms - Aug 15 2023
web aug 23 2023 create document updated august 23 2023 a cleaning service contract is for a commercial business or individual that agrees to offer their labor in exchange for payment the contract may be for commercial janitorial or residential housekeeping work and is commonly written to have the cleaning occur on a scheduled basis
50 sample cleaning agreement in pdf - Jan 08 2023
web 50 sample cleaning agreement in pdf rating the objective of cleaning is not just to clean but to feel happiness living within that environment marie kondo quotes cleaning companies ensure their customers that their worries over the mess will be fixed through employing them which results in a pleasing environment they could settle with
cleaning services contract eforms - Dec 27 2021
web i the parties this cleaning services contract agreement made 20 effective date made by and between client with a mailing address of city of state of
free cleaning contract template download in word google - Jun 01 2022
web make cleaning contract and agreement using templates from template net using free printable and 100 customizable samples from the package draft your house cleaning services and proposals also available are templates for construction cleaning contracts business commercial cleaning and employment outsourcing bid templates
free 13 sample cleaning contract agreement templates in - Jan 28 2022
web sample cleaning contract template details file format google docs ms word pages size a4 us download commercial cleaning contract sample template details file format google docs ms word pages size a4 us download sample cleaning business contract template details file format
21 sample cleaning contracts in pdf ms word - Feb 09 2023
web in a simple definition a cleaning contract contains the terms and conditions determined by two parties engaging in an

agreement for sanitation services and maintenance the real estate owner and the service provider go into details with the processes and arrangements of cleaning schedules

professional cleaning contract template for business use nitro - Jul 02 2022

web a cleaning contract is an important document to have on hand when you own a cleaning business or do housekeeping work on the side a contract outlines everything both you and the client need to know about the transaction including the cost how often cleaning will be done and more

free cleaning service contract template get 2023 sample - Jul 14 2023

web it outlines the terms for confidentiality and the client s performance expectations you can customize this contract template for cleaning services to suit different types of houses buildings from small solo entrepreneur businesses

free cleaning service contract template legal templates - Apr 11 2023

web feb 16 2023 create document a cleaning contract is a legal agreement between the cleaner and their client it sets forth the terms of the contract and what is expected from the cleaning services a free cleaning contract template makes it simple to create your agreement you can download one below

home cleaning services agreement eforms - Apr 30 2022

web the parties agree as follows services contractor will perform the house cleaning services described below the services check all that apply vacuuming and mopping of floors dusting window cleaning washing dishes laundry bathroom cleaning

cleaning service agreement template word pdf - Dec 07 2022

web 1 choose this template start by clicking on fill out the template 2 complete the document answer a few questions and your document is created automatically 3 save print your document is ready you will receive it in word and pdf formats you will be able to modify it cleaning service agreement

41 printable cleaning contract templates 100 free - May 12 2023

web dec 17 2022 a cleaning contract is actually a legal agreement between the cleaner and the client it makes sure that the terms of the relationship between both of these parties is clear and it helps to ensure that there is a clear line of

free cleaning service contract template pdf approveme com - Oct 05 2022

web this cleaning services agreement template pdf is broken down into sections that allow you to customize it to your specific needs a cleaning services contract protects both parties to the terms in the agreement and provides a legal remedy should a party breach the contract other names for a cleaning services agreement include residential

cleaning service agreement templates you can use trafft - Mar 30 2022

web jan 28 2023 a cleaning service agreement is a written contract between two parties for a cleaning service in exchange for payment cleaning agreements can be for residential housekeeping or commercial janitorial work

33 sample cleaning contract templates in pdf ms word - Aug 03 2022
web 33 sample cleaning contract templates cleaning service contract download now vacation rental cleaning contract download now office cleaning contract template download now primary school cleaning contract download now industry cleaning contract template download now cleaning contract inspection report download now
free cleaning service agreement templates australia finder - Nov 06 2022
web jan 21 2021 free cleaning service agreement templates australia finder com au best bank accounts debit bank accounts joint bank accounts no fee bank accounts best savings accounts high interest savings accounts term deposits term deposits long term deposit business term deposit money transfers best international money transfer
cleaning service contract template fill out sign online and - Feb 26 2022
web a cleaning service contract is a legal document signed by the cleaning service provider and the customer to record the details of professional janitorial services to clean a house or workplace if you are a homeowner realtor or office manager this is the perfect way for you to establish the terms and conditions of an arrangement between you and the cleaning
free cleaning services agreement lawdepot - Mar 10 2023
web dec 6 2022 what information is included in a cleaning services agreement a cleaning services agreement should include the following information frequency the cleaning service may be regularly scheduled or a one time job location and time it s important to include where and when the cleaner will provide their service
18 sample cleaning service contract in pdf ms word - Sep 04 2022
web a cleaning service contract is an agreement between the cleaning company and a client that requires cleaning services the agreement could be adjusted based on the length of the required services as well as the cleaner s specific tasks and duties
the edge of honor part one book two team edge 2 download - Apr 23 2022
web the edge of honor part one book two team edge 2 1 the edge of honor part one book two team edge 2 an affair of honor blood honor and time feathers one day the end the assassin s honor prophets without honor ready set jett united states congressional serial set serial no 14742 senate document no 18 appropriations
the edge of honor book two team edge 2 kindle - Mar 03 2023
web the edge of honor book two team edge 2 ebook bryan kt amazon com au books
the edge of honor book two team edge 2 english - Aug 28 2022
web the edge of honor book two team edge 2 english edition ebook bryan kt amazon es tienda kindle
the edge of honor part one book two team edge 2 - Jun 25 2022
web the edge of honor part one book two team edge 2 word of honor oath of honor honor bartholomew and the oobleck little

baseball tiger honor a perfect storm the edge of war the edge of honor breach of honor code of honor men who walk the edge of honor box set matters of honor allegiance of honor oath of honor blue

the edge of honor book two team edge 2 kindle edition - Sep 09 2023

web mar 12 2015 the edge of honor book two team edge 2 kindle edition by bryan kt download it once and read it on your kindle device pc phones or tablets use features like bookmarks note taking and highlighting while reading the edge of honor book two team edge 2

the edge of honor book two team edge 2 kindle - Jun 06 2023

web the edge of honor book two team edge 2 ebook bryan kt amazon co uk kindle store

the edge of honor book two team edge 2 english edition ebooks - Sep 28 2022

web compre the edge of honor book two team edge 2 english edition de bryan kt na amazon com br confira também os ebooks mais vendidos lançamentos e livros digitais exclusivos the edge of honor book two team edge 2 english edition ebooks em inglês na amazon com br

the edge of honor book two team edge 2 kindle - Feb 02 2023

web mar 12 2015 the edge of honor book two team edge 2 ebook bryan kt amazon ca books skip to main content ca hello select your address kindle store select the department you want to search in search en

the edge of honor part one book two team edge 2 copy - May 25 2022

web the edge of honor part one book two team edge 2 word of honor honor bound immortal s honor hidden peril code of honor book 2 little baseball men who walk the edge of honor box set when you dare honor honor s edge at the edge of honor secret honor blade s honor what chris wants the edge of honor savor the danger

the edge of honor part one book two team edge 2 - Nov 30 2022

web 4 the edge of honor part one book two team edge 2 2023 10 28 the vulnerable and to save trinity no one can stand alone this is a time of loyalty across divisions of bonds woven into the heart and the soul of heroes known and unknown standing back to back and holding the line but is an allegiance of honor even possible with traitors

the edge of honor part one book two team edge 2 rachel - Feb 19 2022

web ease you to look guide the edge of honor part one book two team edge 2 as you such as by searching the title publisher or authors of guide you really want you can discover them rapidly in the house workplace or perhaps in your method can be all best place within net connections

the edge of honor team edge 2 ebook barnes noble - Apr 04 2023

web may 1 2015 book two team edge dr jessica bentley knows all about monsters she lives with them deals with them every day but when jessica

the edge of honor part one book two team edge 2 - Mar 23 2022
web you cannot be mystified to enjoy every book gatherings the edge of honor part one book two team edge 2 that we will definitely offer nonetheless below when you visit this web page it will be suitably no question easy to get as without difficulty as acquire manual the edge of honor part one book two team edge 2
the edge of honor part one book two team edge 2 copy - Oct 30 2022
web the edge of honor part one book two team edge 2 downloaded from yale skysafe io by guest patel lang matters of honor routledge new york times bestselling author lori foster captivated readers with her stories of love justice and danger in the men who walk the edge of honor series now fan favorite chris chapey gets his
amazon com customer reviews the edge of honor book two team edge 2 - Jan 01 2023
web find helpful customer reviews and review ratings for the edge of honor book two team edge 2 at amazon com read honest and unbiased product reviews from our users
pdf the edge of honor part one book two team edge 2 - Aug 08 2023
web wanted for murder jake is the navy seal whose choices could lock him away jessi must face her worst fear or face certain death how far will a man go to save the woman he loves the answer is simple all the way over the edge download this book the edge of honor part one book two team edge 2 pdf
the edge of honor 1 team edge 2 by k t bryan goodreads - Oct 10 2023
web part two was almost as intense as part one the storyline goes into more detail about how messed up sidney really is and jessi s pregnancy really is going to complicate her and jake s life with the target on jessi s head
the edge of honor team edge 2 by k t bryan goodreads - Jul 07 2023
web rate this book when a forensic psychologist warns the city of san diego about a modern day jack the ripper on live tv she becomes the killer s next target and must work with her navy seal fiancé to catch the savior before it s too late
the edge of honor part one book two team edge 2 pdf - Jul 27 2022
web 2 2 the edge of honor part one book two team edge 2 2022 09 25 the edge of honor part one book two team edge 2 downloaded from admin store motogp com by guest shaylee carlson bartholomew
the edge of honor ebook by kt bryan rakuten kobo - May 05 2023
web read the edge of honor team edge 2 by kt bryan available from rakuten kobo book two team edge dr jessica bentley knows all about monsters she lives with them deals with them every day but w
professor mohammed abdullah bhatti psfnac faudiovisual com - Oct 04 2022
web academician consultant and research scholar with a proven track record of empirical publications in highly reputed international academic and business journals in the field of

omar abdullah mohammed bashatah linkedin - Nov 24 2021
web mar 25 2023 professor mohammed abdullah bhatti 1 6 downloaded from uniport edu ng on march 25 2023 by guest professor mohammed abdullah bhatti as
2022 yurtdışı Üniversite kabulleri Özel saint benoît fransız - Jan 27 2022
web omar abdullah mohammed bashatah adlı kullanıcının eğitimi profilinde yer alıyor omar abdullah mohammed bashatah adlı kullanıcının linkedin deki tam profili görün ve
İktisat ders müfredatı tobb etÜ - May 31 2022
web aug 13 2020 görüşmeler ibnhaldun zoom us my ibnhalduni adresinde interaktif katılıma açık olacak 13 ağustos perşembe günü saat 10 00 da prof dr halil berktay ve
professor mohammed abdullah bhatti uniport edu ng - Nov 05 2022
web 16 03 2021 2020 2021 bahar dÖnemİ kapanan seÇmelİ dersler 04 03 2021 lisansüstü bahar dönemi ders programları 04 03 2021 arapça hazırlık sınıfları güncel
professor mohammed abdullah bhatti uniport edu ng - Jul 01 2022
web professor mohammed abdullah bhatti 2 6 downloaded from uniport edu ng on june 6 2023 by guest pakistan cinema 1947 1997 mushtāq gazdar 1997 the book features a
İtÜ akademİ prof dr abdullah gedikli anasayfa - Oct 24 2021

hazrat abdullah bhatti s lovers facebook - Jul 13 2023
web sang e meel publications 25 lower mall lahore pakistan email smp sangemeel com phone 924237220100
İstanbul Üniversitesi İlahiyat fakültesi - Sep 03 2022
web mar 11 2023 professor mohammed abdullah bhatti 2 5 downloaded from uniport edu ng on march 11 2023 by guest and equal rights within muslim communities
professor mohammed abdullah bhatti - Jan 07 2023
web apr 8 2023 right here we have countless ebook professor mohammed abdullah bhatti and collections to check out we additionally manage to pay for variant types and along
prof muhammad abdullah bhatti the library pk - Jun 12 2023
web prof muhammad abdullah bhatti has written 17 columns and he is writing on the site since 17th december 2018 read the columns and articles about pakistan politics
amazon com prof muhammad abdullah bhatti books - Mar 09 2023
web professor mohammed abdullah bhatti getting the books professor mohammed abdullah bhatti now is not type of

inspiring means you could not on your own going
israr e rohaniyaat by prof m abdullah bhatti - Aug 14 2023
web explore our comprehensive list of prof muhammad abdullah bhatti books and find your next favorite read find out what books to read next on our list
professor mohammed abdullah bhatti uniport edu ng - Apr 29 2022
web dr omar khalid bhatti is an associate professor of management at iqra university islamabad campus pakistan and school of business istanbul medipol university
examining islamic piety at workplace via an artificial neural network - Feb 25 2022
web prof dr bülent oktay ın İlgilendiği diğer alanlar ve hobileri klasik oto off road analog müzik motosiklet kayak binicilik denizcilik 1956 yılında kilis te doğdum
urdu columns by prof muhammad abdullah bhatti urdupoint - Apr 10 2023
web columns written by prof abdullah bhatti sb interview talk of prof abdullah bhatti sb contact us you are visitor since 13 mar 2013 01 09 pm pst
professor mohammed abdullah bhatti uniport edu ng - Dec 06 2022
web professor mohammed abdullah bhatti february 28th 2009 on february 12 2009 muzzammil hassan informed police that he had beheaded his wife hassan had
online akademisyen görüşmeleri prof dr halil berktay prof - Mar 29 2022
web jun 9 2022 tüm öğrencilerimize üniversite hayatlarında ve kişisel yaşamlarında başarılar diliyoruz saint benoît lisesi nin eğitim kadrosu onlarla gurur duyuyor tebrikler 2022
noor e khuda - Feb 08 2023
web aug 14 2023 professor mohammed abdullah bhatti 2 7 downloaded from uniport edu ng on august 14 2023 by guest report pakistan association for the
professor mohammed abdullah bhatti uniport edu ng - Sep 22 2021

omar khalid bhatti İstanbul İstanbul türkiye linkedin - Aug 02 2022
web ikt 262 dersini alıp başarı ile tamamlayan öğrenciler için bu ders bölüm fakülte veya üniversite seçmeli dersi olarak sayılacaktır 4 İkt 352 dersi zorunlu bölüm dersi olarak
books by prof muhammad abdullah bhatti sang e meel - May 11 2023
web online shopping from a great selection at books store hello select your address
hakkımızda prof dr bülent oktay - Dec 26 2021

web prof dr abdullah gedikli Çalışma alanları deprem sayısal modelleme katı cisimler mekaniği eğitim durumu İstanbul teknik Üniversitesi İnşaat mühendisliği dr