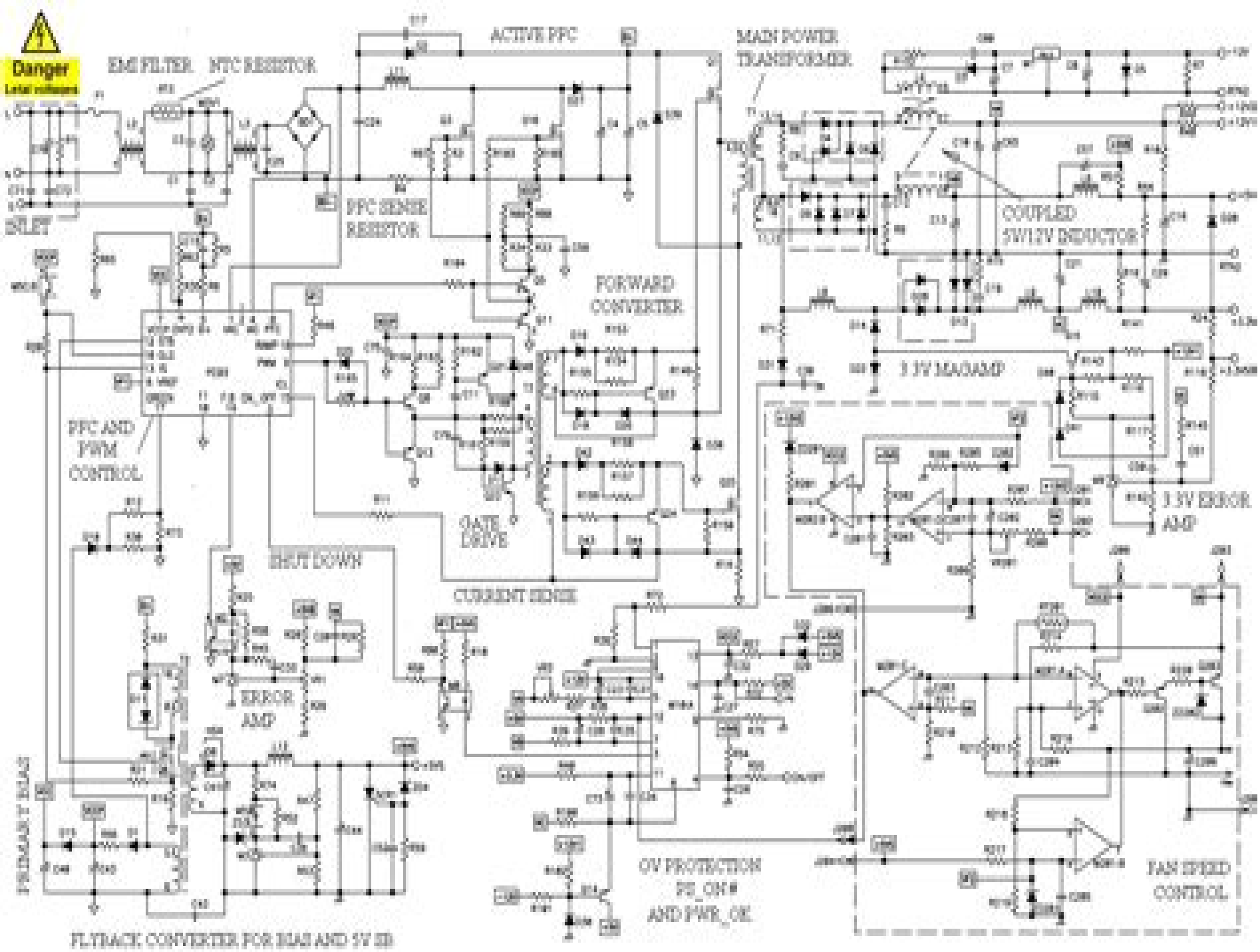
Danger
Lethal voltages
EMI FILTER
NTC RESISTOR
ACTIVE PFC
MAIN POWER TRANSFORMER
INLET
PFC SENSE RESISTOR
COUPLED 5V/12V INDUCTOR
FORWARD CONVERTER
3.3V MAGAMP
PFC AND PWM CONTROL
GATE DRIVE
3.3V ERROR AMP
SHUT DOWN
CURRENT SENSE
ERROR AMP
PRIMARY BIAS
OV PROTECTION PS_ON# AND PWR_OK
FAN SPEED CONTROL
FLYBACK CONVERTER FOR BIAS AND 5V SB

Computer Power Supply Schematic Diagram

Xiang Xie

Computer Power Supply Schematic Diagram:

, *Direct Support and General Support Maintenance Manual for Position and Azimuth Determining System AN/USQ-70* ,1990 Hacking Electronics: An Illustrated DIY Guide for Makers and Hobbyists Simon Monk,2013-03-22 Bring your electronic inventions to life This full color book is impressive there are some really fun projects GeekDad Wired com Who needs an electrical engineering degree This intuitive guide shows how to wire disassemble tweak and re purpose everyday devices quickly and easily Packed with full color illustrations photos and diagrams Hacking Electronics teaches by doing each topic features fun easy to follow projects Discover how to hack sensors accelerometers remote controllers ultrasonic rangefinders motors stereo equipment microphones and FM transmitters The final chapter contains useful information on getting the most out of cheap or free bench and software tools Safely solder join wires and connect switches Identify components and read schematic diagrams Understand the how and why of electronics theory Work with transistors LEDs and laser diode modules Power your devices with a c supplies batteries or solar panels Get up and running on Arduino boards and pre made modules Use sensors to detect everything from noxious gas to acceleration Build and modify audio amps microphones and transmitters Fix gadgets and scavenge useful parts from dead equipment **Progress of Precision Engineering and Nano Technology** Shen Dong,Ying Xue Yao,2007-05-15 Selected Papers from Proceeding of the First International Conference on Precision Engineering and Micro Nano Technology in Asia November 12 14 2005 Shenzhen China CIRED: pt. 1. Contributions. Technical theme 1, Network components ,2001 **Ciarcia's Circuit Cellar** Steve Ciarcia,1982 Discusses Uses for the Microcomputer Including Projects Methods for Interfacing the Personal Computer with Its Environment **Journal of Heat Transfer** ,2002 **Instrumentation and Measurement Systems** Khairurrijal Khairurrijal,Kuwat Triyana,Shidiq Nur Hidayat,2015-07-02 Selected peer reviewed papers from the 2014 International Seminar on Instrumentation Measurement and Metrology August 27 28 2014 Yogyakarta Indonesia **Proceedings of the ASME Conference on Smart Materials, Adaptive Structures and Intelligent Systems--2009** ,2009 A collection of 81 full length peer reviewed technical papers that covers such topics as Bio inspired Smart Materials and Structures Enabling Technologies and Integrated System Design Multifunctional Materials and Structural Health Monitoring NDE A Functional Description of the Edvac [an Automatically-sequence Serial Binary Electronic Digital Computer Moore School of Electrical Engineering,1949 Engineering Education ,1987-10 **Proceedings of the ... SEM Spring Conference on Experimental Mechanics** ,1990 **Journal of Electronic Packaging** ,1991 **Japanese Journal of Applied Physics** ,1983 Kilobaud: Microcomputing ,1979 Proceedings International Conference on Large Electric Systems,1970 **Microcomputer Troubleshooting** James Perozzo,1986 **Proceedings of the Society for Experimental Mechanics** Society for Experimental Mechanics (U.S.),1992 **Dictionary of Electrical, Electronics, and Computer Abbreviations** Phil Raymond Brown,1985 *Popular Electronics* ,1982

As recognized, adventure as skillfully as experience approximately lesson, amusement, as without difficulty as union can be gotten by just checking out a book **Computer Power Supply Schematic Diagram** next it is not directly done, you could tolerate even more all but this life, not far off from the world.

We pay for you this proper as competently as simple pretentiousness to get those all. We pay for Computer Power Supply Schematic Diagram and numerous ebook collections from fictions to scientific research in any way. accompanied by them is this Computer Power Supply Schematic Diagram that can be your partner.

https://py.bijouxmedusa.com/data/publication/HomePages/compilation_of_food_composition_datasets_23_12_10.pdf

Table of Contents Computer Power Supply Schematic Diagram

1. Understanding the eBook Computer Power Supply Schematic Diagram
    - The Rise of Digital Reading Computer Power Supply Schematic Diagram
    - Advantages of eBooks Over Traditional Books
2. Identifying Computer Power Supply Schematic Diagram
    - Exploring Different Genres
    - Considering Fiction vs. Non-Fiction
    - Determining Your Reading Goals
3. Choosing the Right eBook Platform
    - Popular eBook Platforms
    - Features to Look for in an Computer Power Supply Schematic Diagram
    - User-Friendly Interface
4. Exploring eBook Recommendations from Computer Power Supply Schematic Diagram
    - Personalized Recommendations
    - Computer Power Supply Schematic Diagram User Reviews and Ratings
    - Computer Power Supply Schematic Diagram and Bestseller Lists
5. Accessing Computer Power Supply Schematic Diagram Free and Paid eBooks

- Computer Power Supply Schematic Diagram Public Domain eBooks
- Computer Power Supply Schematic Diagram eBook Subscription Services
- Computer Power Supply Schematic Diagram Budget-Friendly Options

6. Navigating Computer Power Supply Schematic Diagram eBook Formats
   - ePub, PDF, MOBI, and More
   - Computer Power Supply Schematic Diagram Compatibility with Devices
   - Computer Power Supply Schematic Diagram Enhanced eBook Features
7. Enhancing Your Reading Experience
   - Adjustable Fonts and Text Sizes of Computer Power Supply Schematic Diagram
   - Highlighting and Note-Taking Computer Power Supply Schematic Diagram
   - Interactive Elements Computer Power Supply Schematic Diagram
8. Staying Engaged with Computer Power Supply Schematic Diagram
   - Joining Online Reading Communities
   - Participating in Virtual Book Clubs
   - Following Authors and Publishers Computer Power Supply Schematic Diagram
9. Balancing eBooks and Physical Books Computer Power Supply Schematic Diagram
   - Benefits of a Digital Library
   - Creating a Diverse Reading Collection Computer Power Supply Schematic Diagram
10. Overcoming Reading Challenges
    - Dealing with Digital Eye Strain
    - Minimizing Distractions
    - Managing Screen Time
11. Cultivating a Reading Routine Computer Power Supply Schematic Diagram
    - Setting Reading Goals Computer Power Supply Schematic Diagram
    - Carving Out Dedicated Reading Time
12. Sourcing Reliable Information of Computer Power Supply Schematic Diagram
    - Fact-Checking eBook Content of Computer Power Supply Schematic Diagram
    - Distinguishing Credible Sources
13. Promoting Lifelong Learning
    - Utilizing eBooks for Skill Development

- Exploring Educational eBooks

14. Embracing eBook Trends
    - Integration of Multimedia Elements
    - Interactive and Gamified eBooks

Computer Power Supply Schematic Diagram Introduction

In todays digital age, the availability of Computer Power Supply Schematic Diagram books and manuals for download has revolutionized the way we access information. Gone are the days of physically flipping through pages and carrying heavy textbooks or manuals. With just a few clicks, we can now access a wealth of knowledge from the comfort of our own homes or on the go. This article will explore the advantages of Computer Power Supply Schematic Diagram books and manuals for download, along with some popular platforms that offer these resources. One of the significant advantages of Computer Power Supply Schematic Diagram books and manuals for download is the cost-saving aspect. Traditional books and manuals can be costly, especially if you need to purchase several of them for educational or professional purposes. By accessing Computer Power Supply Schematic Diagram versions, you eliminate the need to spend money on physical copies. This not only saves you money but also reduces the environmental impact associated with book production and transportation. Furthermore, Computer Power Supply Schematic Diagram books and manuals for download are incredibly convenient. With just a computer or smartphone and an internet connection, you can access a vast library of resources on any subject imaginable. Whether youre a student looking for textbooks, a professional seeking industry-specific manuals, or someone interested in self-improvement, these digital resources provide an efficient and accessible means of acquiring knowledge. Moreover, PDF books and manuals offer a range of benefits compared to other digital formats. PDF files are designed to retain their formatting regardless of the device used to open them. This ensures that the content appears exactly as intended by the author, with no loss of formatting or missing graphics. Additionally, PDF files can be easily annotated, bookmarked, and searched for specific terms, making them highly practical for studying or referencing. When it comes to accessing Computer Power Supply Schematic Diagram books and manuals, several platforms offer an extensive collection of resources. One such platform is Project Gutenberg, a nonprofit organization that provides over 60,000 free eBooks. These books are primarily in the public domain, meaning they can be freely distributed and downloaded. Project Gutenberg offers a wide range of classic literature, making it an excellent resource for literature enthusiasts. Another popular platform for Computer Power Supply Schematic Diagram books and manuals is Open Library. Open Library is an initiative of the Internet Archive, a non-profit organization dedicated to digitizing cultural artifacts and making them accessible to the public. Open Library hosts millions of books, including both public domain works and contemporary titles. It also allows users to borrow digital copies of

certain books for a limited period, similar to a library lending system. Additionally, many universities and educational institutions have their own digital libraries that provide free access to PDF books and manuals. These libraries often offer academic texts, research papers, and technical manuals, making them invaluable resources for students and researchers. Some notable examples include MIT OpenCourseWare, which offers free access to course materials from the Massachusetts Institute of Technology, and the Digital Public Library of America, which provides a vast collection of digitized books and historical documents. In conclusion, Computer Power Supply Schematic Diagram books and manuals for download have transformed the way we access information. They provide a cost-effective and convenient means of acquiring knowledge, offering the ability to access a vast library of resources at our fingertips. With platforms like Project Gutenberg, Open Library, and various digital libraries offered by educational institutions, we have access to an ever-expanding collection of books and manuals. Whether for educational, professional, or personal purposes, these digital resources serve as valuable tools for continuous learning and self-improvement. So why not take advantage of the vast world of Computer Power Supply Schematic Diagram books and manuals for download and embark on your journey of knowledge?

FAQs About Computer Power Supply Schematic Diagram Books

How do I know which eBook platform is the best for me? Finding the best eBook platform depends on your reading preferences and device compatibility. Research different platforms, read user reviews, and explore their features before making a choice. Are free eBooks of good quality? Yes, many reputable platforms offer high-quality free eBooks, including classics and public domain works. However, make sure to verify the source to ensure the eBook credibility. Can I read eBooks without an eReader? Absolutely! Most eBook platforms offer web-based readers or mobile apps that allow you to read eBooks on your computer, tablet, or smartphone. How do I avoid digital eye strain while reading eBooks? To prevent digital eye strain, take regular breaks, adjust the font size and background color, and ensure proper lighting while reading eBooks. What the advantage of interactive eBooks? Interactive eBooks incorporate multimedia elements, quizzes, and activities, enhancing the reader engagement and providing a more immersive learning experience. Computer Power Supply Schematic Diagram is one of the best book in our library for free trial. We provide copy of Computer Power Supply Schematic Diagram in digital format, so the resources that you find are reliable. There are also many Ebooks of related with Computer Power Supply Schematic Diagram. Where to download Computer Power Supply Schematic Diagram online for free? Are you looking for Computer Power Supply Schematic Diagram PDF? This is definitely going to save you time and cash in something you should think about.

Find Computer Power Supply Schematic Diagram :

compilation of food composition datasets 23 12 10
commonwealth catalogue of king george vi
~~como dibujar kawaii el~~
constitutionfacts crossword puzzle
~~colour image segmentation using k means ijarcsse~~
computer quiz questions with answers
complete korean beginner to intermediate course book and audio support learn to read write speak and understand a new language with teach yourself teach yourself language
colour a handbook of the theory of colour
~~computer security principles and practices second edition~~
collision word problem and answers soundmetals
comprehension to 14 answer book third edition new edition by geoff barton published by oup oxford 2012
combinaciones reducidas record de primitiva bonoloto y
complexity and approximation combinatorial optimization problems and their approximability properties
~~colloquial polish the complete course for beginners~~
communities of practice learning meaning and identity etienne wenger

Computer Power Supply Schematic Diagram :

focus on health loose leaf rent 9780073529738 chegg - Jan 07 2023
web jan 11 2012 rent focus on health loose leaf 11th edition 978 0073529738 today or search our site for other textbooks by dale b hahn every textbook comes with a 21 day any reason guarantee published by mcgraw hill humanities social sciences languages focus on health loose leaf 11th edition solutions are
focus on health hahn dale payne wayne lucas ellen - May 31 2022
web jan 17 2008 focus on health loose leaf edition 193 40 110 in stock this text offers an exciting and practical approach to the teaching of the traditional content areas of personal health its two key themes the six dimensions of health and the five developmental tasks help students apply the text s content to their own lives by improving their
test bank for focus on health 11th edition by dale hahn - Jul 01 2022
web jun 7 2023 test bank for focus on health 11th edition by dale hahn wayne payne ellen lucas all chapters 1 focus on

health 11e dale hahn wayne payne ellen lucas test bank answer at the end of

focus on health 11th edition pdf free download - Sep 03 2022

web about the author of focus on health 11th edition pdf free download ellen b lucas formerly mauer has been on staff at the counseling center at ball state university for the past 13 years she is currently the associate director at the counseling center and coordinates the center s outreach and consultation programs

focus on health 11th edition chegg - Dec 06 2022

web jan 11 2012 coupon rent focus on health 11th edition by hahn ebook 9780077434656 and save up to 80 on online textbooks at chegg com now skip to main content books rent buy read return sell study tasks homework help exam prep understand a topic writing citations tools expert q a textbook solutions math

focus on health 11th edition 9780073529738 007743465x - Apr 10 2023

web focus on health 11th edition is written by hahn dale payne wayne lucas ellen and published by mcgraw hill higher education the digital and etextbook isbns for focus on health are 007743465x and the print isbns are 9780073529738 0073529737

focus on health loose leaf edition 11th edition amazon com - May 11 2023

web jul 1 2012 focus on health loose leaf edition 11th edition 11th edition kindle edition by dale hahn author wayne payne author 1 more format kindle edition 4 4 112 ratings see all formats and editions etextbook 52 50 71 00 loose leaf 115 98 135 45 12 used from 111 00 7 new from 135 45

free focus on health by hahn 11th edition - Mar 29 2022

web many serious public health problems confront the world in the new millennium anthropology and public health examines the critical role of anthropology in four crucial public health domains 1 anthropological understandings of public health problems such as malaria hiv aids and diabetes 2

focus on health hahn 11th edition cyberlab sutd edu sg - Feb 25 2022

web focus on health hahn 11th edition w patton hahn named managing shareholder of baker donelson s baker donelson jul 19 2019 w patton hahn named managing shareholder of baker donelson s baker donelson mu health care offering free health screenings education at the kbia nov 30 2017

focus on health loose leaf 11th edition textbook solutions chegg - Oct 04 2022

web our interactive player makes it easy to find solutions to focus on health loose leaf 11th edition problems you re working on just go to the chapter for your book hit a particularly tricky question bookmark it to easily review again before an exam the best part

focus on health hahn dale b archive org - Jul 13 2023

web focus on health hahn dale b free download borrow and streaming internet archive

focus on health 11 e mcgraw hill education - Jun 12 2023

web focus on health 11 e dale b hahn ball state university wayne a payne ball state university retired

focus on health 11th edition solutions and answers quizlet - Aug 02 2022

web 11th edition isbn 9780077434656 dale hahn ellen lucas wayne payne sorry we don t have content for this book yet find step by step expert solutions for your textbook or homework problem find step by step solutions and answers to focus on health 9780077434656 as well as thousands of textbooks so you can move forward with

focus on health loose leaf edition 11th edition amazon com - Sep 15 2023

web jan 11 2012 focus on health loose leaf edition 11th edition by dale hahn author wayne payne author ellen lucas author 0 more 4 5 4 5 out of 5 stars 112 ratings

focus on health 11th edition ebook pdf ebook247 - Nov 05 2022

web focus on health 11th edition ebook pdf authors by dale hahn author wayne payne author ellen lucas author focus on health offers an exciting and practical approach to the teaching of the traditional content areas of personal health

focus on health loose leaf edition 11th edition google books - Aug 14 2023

web jan 11 2012 focus on health loose leaf edition 11th edition authors dale hahn wayne payne ellen lucas publisher mcgraw hill higher education 2012 isbn 007743465x 9780077434656 subjects

focus on health loose leaf edition 11th edition mcgraw hill - Oct 16 2023

web focus on health loose leaf edition 11th edition isbn10 0073529737 isbn13 9780073529738 by dale hahn wayne payne and ellen lucas 2013 purchase options print from 143 79 loose leaf purchase isbn10 0073529737 isbn13 9780073529738 details unbound loose leaf version of full text view shipping options 143 79

get the free focus on health 11th edition pdf form pdffiller - Apr 29 2022

web who needs focus on health 11th 01 individuals who are interested in maintaining a healthy lifestyle and overall well being 02 people who want to assess their current health status and make improvements if necessary 03 individuals who have pre existing health conditions and want to monitor their health regularly

focus on health loose leaf edition 11th direct textbook - Mar 09 2023

web focus on health loose leaf edition 11th author s wayne payne dale hahn ellen lucas published 2012 publisher mcgraw hill format ringbound 512 pages isbn 978 0 07 352973 8 edition 11th eleventh 11e reviews find in library searching bookstores for the lowest price all new used rental ebook international

focus on health looseleaf 11th edition textbooks com - Feb 08 2023

web focus on health looseleaf 11th edition isbn13 9780073529738 isbn10 0073529737 by dale hahn cover type loose leaf

edition 11th 13 copyright 2013 publisher mcgraw hill publishing company published 2013 international no summary author bio table of contents digital rights new 134 80 ebook 52 50 you save

how to write non fiction turn your knowledge into words - Oct 05 2022

web may 31 2018 how to write non fiction turn your knowledge into words books for writers book 9 ebook penn joanna amazon co uk kindle store health family lifestyle

how to write non fiction turn your knowledge into words - Sep 16 2023

web how to write non fiction turn your knowledge into words penn joanna amazon com tr kitap

how to write non fiction turn your knowledge into words - May 12 2023

web how to write the first draft how to dictate your book turn your blog podcasts videos talks into a book speed quality and perfectionism focus and shiny object syndrome writer s block co writing a non fiction book how to turn a boring book into an engaging read elements of fiction in non fiction

how to write non fiction turn your knowledge into words - Jul 14 2023

web writing non fiction 7 steps to write your non fiction book an overview of the process why write a non fiction book can i write a non fiction book if i m not an expert resources for writing memoir interviews and recommended books business models for non fiction books decide on the book title of your non fiction book

how to write non fiction turn your knowledge into words - Mar 30 2022

web buy how to write non fiction turn your knowledge into words by penn joanna online on amazon ae at best prices fast and free shipping free returns cash on delivery available on eligible purchase

how to write non fiction turn your knowledge into words - Jun 01 2022

web may 22 2018 how to write non fiction turn your knowledge into words penn joanna 9781912105786 books amazon ca

how to write non fiction turn your knowledge into words writing - Feb 26 2022

web this is not the first book from the author joanna penn i read and like the other ones how to write non fiction turn your knowledge into words is packed with great tips and ideas to help us trive as writers read more report vida jovanovic palanova 5 0

how to write a non fiction book a step by step guide - Aug 03 2022

web if you need more help check out how to write non fiction turn your knowledge into words available in ebook print audiobook workbook and large print editions the more work you do upfront the easier the book will be to produce i m currently writing my fifteenth non fiction book with more planned and my process is quite defined these days

how to write non fiction turn your knowledge into words - Jun 13 2023

web may 22 2018 how to write non fiction turn your knowledge into words books for writers penn joanna 9781912105786

amazon com books books

how to write non fiction turn your knowledge into words writing - Apr 11 2023

web nov 5 2021 how to write non fiction turn your knowledge into words writing craft books penn joanna on amazon com free shipping on qualifying offers how to write non fiction turn your knowledge into words writing craft books

how to write non fiction turn your knowledge into words audible com - Apr 30 2022

web how to write non fiction turn your knowledge into words as it s meant to be heard narrated by caroline holroyd discover the english audiobook at audible free trial available

how to write non fiction turn your knowledge into ubuy turkey - Sep 04 2022

web shop how to write non fiction turn your knowledge into words books for writers paperback may 22 2018 online at a best price in turkey get special offers deals discounts fast delivery options on international shipping with every purchase on ubuy turkey 1912105780

how to write non fiction turn your knowledge into words - Nov 06 2022

web may 31 2018 how to write non fiction turn your knowledge into words books for writers book 9 kindle edition by penn joanna download it once and read it on your kindle device pc phones or tablets use features like bookmarks note taking and highlighting while reading how to write non fiction turn your knowledge into

how to write non fiction turn your knowledge into words - Jan 28 2022

web abebooks com how to write non fiction turn your knowledge into words 9781912105786 by penn joanna and a great selection of similar new used and collectible books available now at great prices how to write non fiction turn your knowledge into words penn joanna 9781912105786 abebooks

how to write non fiction turn your knowledge into words goodreads - Aug 15 2023

web may 28 2018 super helpful guide to writing and publishing non fiction once again joanna penn has provided a helpful and concise guide for writers her tips on researching structuring and writing a non fiction book as well as marketing and building a business around it are thorough and insightful

how to write non fiction turn your knowledge into words - Feb 09 2023

web nov 15 2018 how to write non fiction turn your knowledge into words joanna penn google books how to write non fiction turn your knowledge into words joanna penn curl up press nov 15 2018

how to write non fiction turn your knowledge into words - Jul 02 2022

web nov 15 2018 start writing your book today a step by step plan to write your nonfiction book from first draft to finished manuscript by morgan gist macdonald paperback usually dispatched in 2 to 3 days

how to write non fiction turn your knowledge into words - Dec 07 2022

web buy how to write non fiction turn your knowledge into words hardback ed by penn joanna isbn 9781912105021 from amazon s book store everyday low prices and free delivery on eligible orders

how to write non fiction turn your knowledge into words - Jan 08 2023

web the first non fiction book i wrote changed my life sure it helped other people but mostly it altered the course of my life so much so that 10 years later i make a living with my writing i ve written seven other non fiction books and co written two more and built a multi six figure income around my non fiction eco system

how to write non fiction turn your knowledge into words - Mar 10 2023

web may 22 2018 an essential guide to anyone embarking on writing a non fiction book how to write non fiction is full of practical implementable advice backed up with research there s no waffle here every page is jam packed and the additional reading lists very valuable i will be buying the workbook to accompany my kindle version

le quotidien des gauchos de patagonie national - Oct 17 2023

web sep 30 2021 en patagonie des familles de gauchos perpétuent des traditions comme la yerra événement annuel où l on compte toilette marque et stérilise les animaux

gaucho meaning history pants facts britannica - Jan 08 2023

web derrière l image idéalisée du gaucho il y a des cavaliers qui veillent sur d immenses troupeaux avec pour seuls compagnons leurs chevaux leurs chiens et le vent pendant

photo story horseback adventures on the gaucho trail through - Mar 10 2023

web souvent on associe les gauchos à la pampa pampa à l argentine mais sait on seulement que la patagonie argentine elle aussi compte avec les siens ses gauchos rudes et

les gauchos de patagonie youtube - Jul 14 2023

web jun 9 2020 viajes conoce más sobre la cultura gaucha de la patagonia en los ranchos aislados de argentina se destacan las montañas imponentes la comida casera y las

los gauchos de la patagonia ladera sur - Jan 28 2022

gauchos argentins la vie de gaucho en argentine terra argentina - Oct 05 2022

web le gaucho argentin est alors chargé de veiller sur le bétail de le convoyer mais aussi de dresser les chevaux partenaires indispensables de ces cavaliers de la pampa et des

gauchos in patagonia experience a day in the life - Apr 11 2023

web il existe en fait plusieurs types de gaucho dont le nom est lié à leur activité le domador qui est en charge du dressage des chevaux le boleador qui doit son nom à son arme les

los gauchos de la patagonia argentina el glaciar perito moreno - Feb 26 2022
web 1 day ago la belleza de la patagonia en todo su esplendor a través de imágenes y palabras el libro la patagonia y su alma editado por ediciones larivière captura la
the gauchos of patagonia a story of grit and - Aug 03 2022
web les gauchos forment ce qu ils appellent une patrie qui dépasse les frontières des etats d argentine et du chili avec leur propre culture basée sur les chevaux et la lutte
interesting things to know about the gauchos of - Aug 15 2023
web nov 16 2018 dans les zones reculées de patagonie il arrive que les gauchos vivent dans des maisons au sol en terre battue sans cuisinière à bois ni poêle À russfin en
gaucho pants encyclopedia com - Nov 25 2021

les gauchos en patagonie cavalngo com - Dec 07 2022
web sebastian was married and had a young daughter who began riding with him as soon as she was born his sister is a renowned horsewoman in argentina watching sebastian fly like
el calafate les nouveaux gauchos de patagonie got2globe - Apr 30 2022
web pero no se sabe que la patagonia también tiene sus gauchos son duros y nobles fiel a sus tierras áridas y su clima violento donde el viento los acompaña todo el año los
patagonie les gauchos gardiens de troupeaux du bout du monde - Sep 04 2022
web a el calafate on croise des éleveurs équestres gauchos et autres qui pour le plus grand plaisir des visiteurs montrent la vie traditionnelle de la patagonie
in patagonia gauchos keep traditions alive national geographic - Sep 16 2023
web jul 1 2017 les gauchos de patagonie nat geo france 1 21m subscribers subscribe 4 2k views 5 years ago plus d informations de photos et de vidéos sur nationalgeographic fr
la belleza de la patagonia en todo su esplendor a través de - Oct 25 2021

discovery de patagonie argentinean gaucho and chilean huaso - Feb 09 2023
web découvrez la culture et les traditions des gauchos argentins dans la pampa de buenos aires et en patagonie argentine estancias typiques
conoce más sobre la cultura gaucha de la patagonia - May 12 2023
web the first gauchos were the sons of pioneers mainly andalusian who settled in the argentine pampas in the middle of the

16th century the pampas those vast fertile

cheval de patagonie - Mar 30 2022

web gaucho pants gaucho pants are wide legged trousers for women with a cuff that ends around mid calf taking their name from pants once worn by south american cowboys

la culture des gauchos argentins terres argentines - Jun 01 2022

web antes de ir a nueva york brasil italia por favor vayan a la patagonia su patagonia vean y escuchen fluír el río baker con sus aguas turquesas caminen sobre el hielo

gauchos patagonia film horacio cabilla youtube - Jul 02 2022

web jun 17 2023 los gauchos de la patagonia quiénes son la figura del gaucho nace en la pampa oriental a mediados del siglo xviii exactamente en 1760 cuando se conoció

patagonie on a partagé le quotidien des cavaliers - Jun 13 2023

web sep 13 2023 deep in the heart of patagonia at the southern tip of argentina gaucho guides saddle up to lead horseback adventures through dramatic mountain passes and

los gauchos de la patagonia - Dec 27 2021

les gauchos de patagonie - Nov 06 2022

web sencillos humanos y auténticos así con los gauchos un vídeo que nos inspira en estas circunstancias y nos enseña lo esencial de la vida una pieza editada con mucho