0403 ALTERNATOR (COMPONENT PARTS)
ALTERNATEUR (PARTIES COMPOSANTES)
WECHSELSTROMMASCHINE (EINZEL-TEIL)

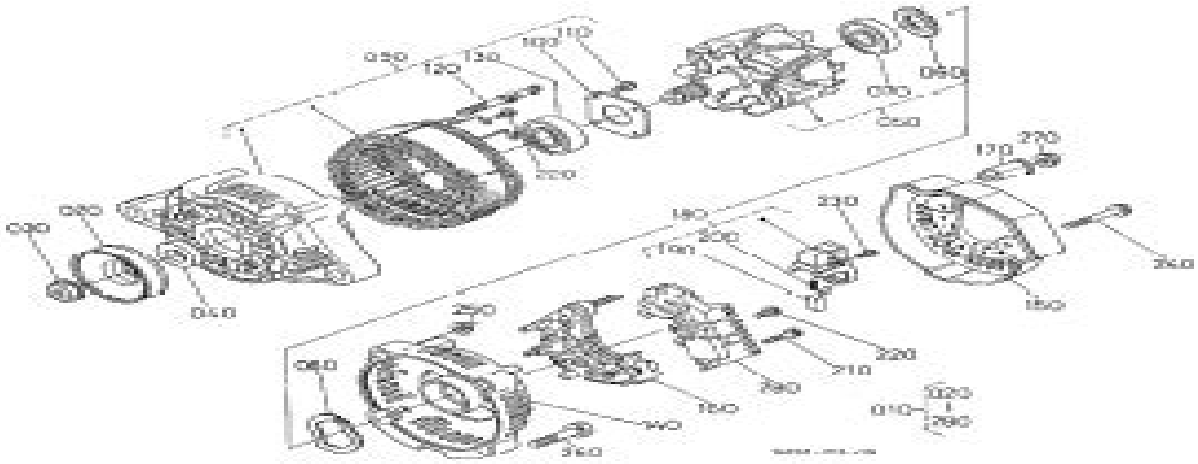

A:DT22-E88-EC-STD-2

ILL. No.	PART No. REFERENCE BESELL-Nr.	PART NAME	DESIGNATION	BEZEICHNUNG	STICKER STICKER AUFKLEBER No. A	B	I. C.	REMARKS REMARQUES BEMERKUNGEN
010	16241-6401-0	ASSY ALTERNATOR	ALTERNATEUR COMPLET	GRP. WECHSELSTROMDYN.	1	–		
010	16241-6401-2	ASSY ALTERNATOR	ALTERNATEUR COMPLET	GRP. WECHSELSTROMDYN.	1	–	←	
020	15881-6411-0	PULLEY, DYNAMO	POULIE D'ALTERNATEUR	RIEMENSCHEIBE DYNAMO	1	–		
030	15881-9201-0	NUT	ECROU	MUTTER	1	–		
040	15881-6415-0	COLLAR	COLLIER	HUELSE	1	–		
050	15881-6404-0	ROTOR	ROTOR	ROTOR	1	–		
050	66436-6404-0	ROTOR	ROTOR	ROTOR	1	–	←	
060	15881-6480-0	COVER, BEARING	COUVERCLE	DECKEL	1	–		
070	16652-6477-0	BEARING, BALL	ROULEMENT A BILLES	KUGELLAGER	1	–		
080	15881-6481-0	WASHER, THRUST	RONDELLE DE BUTEE	DRUCKSCHEIBE	1	–		
090	66436-6402-0	FRAME, DRIVE END	BATI	ANTRIEBSRAHMEN	1	–		
100	15881-6471-0	PLATE, RETAINER	PLAQUE RETENUE	HALTEPLATTE	1	–		
110	15881-9301-0	SCREW, ROUND HEAD	VIS A TETE RONDE	RUNDKOPFSCHRAUBE	4	–		
120	15881-6476-0	BOLT, THROUGH	VIS PASSANT	DURCHGEFENDEBOLZEN	2	–		
130	16652-6478-0	BEARING, BALL	ROULEMENT A BILLES	KUGELLAGER	1	–		
140	16241-6406-0	FRAME, END	BATI	RAHMEN	1	–		
140	16231-6406-0	FRAME, END	BATI	RAHMEN	1	–	←	
150	16231-6423-0	COVER, END	PALIER ARRIERE	DECKEL	1	–		
160	16241-6485-0	ASSY RECTIFIER	REDRESSEUR	MONT. GLEICHRICHTER	1	–		
170	16241-6490-0	BUSH, INSULATION	BAGUE ISOLANTE	BUCHSE	1	–		
180	16652-6431-0	HOLDER, BRUSH	PORTE-BALAI	BUERSTEN HALTER	1	–		
190	15881-6409-0	BRASH	PATTE D'ATTACHE	BUERSTE	4	–		
200	15881-6433-0	SPRING, BRUSH	RESSORT DE BALAI	SCHLEIFBUERSTENFEDER	4	–		
210	15881-9302-0	SCREW, ROUND HEAD	VIS A TETE RONDE	RUNDKOPFSCHRAUBE	3			
220	15881-9303-0	SCREW, ROUND HEAD	VIS A TETE RONDE	RUNDKOPFSCHRAUBE	5	–		
230	15881-9304-0	SCREW, ROUND HEAD	VIS A TETE RONDE	RUNDKOPFSCHRAUBE	1			
240	15881-9104-0	BOLT	VIS	BOLZEN	1	–		
250	15881-9202-0	NUT	ECROU	MUTTER	1	–		
260	15881-9105-0	BOLT	VIS	BOLZEN	2	–		
270	14182-9203-0	NUT	ECROU	MUTTER	1	–		

<-> Interchangeable; -/- not Interchangeable; ←- new for old; -> old for new

www.epcatalogs.com

Kubota D722 Engine Parts

J Rink

Kubota D722 Engine Parts:

Ignite the flame of optimism with is motivational masterpiece, Fuel Your Spirit with **Kubota D722 Engine Parts** . In a downloadable PDF format (*), this ebook is a beacon of encouragement. Download now and let the words propel you towards a brighter, more motivated tomorrow.

https://py.bijouxmedusa.com/results/detail/index.jsp/Kaplan_Sat_Subject_Test_Biology_Em_2015_2016_Kaplan_Test_Prep.pdf

Table of Contents Kubota D722 Engine Parts

1. Understanding the eBook Kubota D722 Engine Parts
    - The Rise of Digital Reading Kubota D722 Engine Parts
    - Advantages of eBooks Over Traditional Books
2. Identifying Kubota D722 Engine Parts
    - Exploring Different Genres
    - Considering Fiction vs. Non-Fiction
    - Determining Your Reading Goals
3. Choosing the Right eBook Platform
    - Popular eBook Platforms
    - Features to Look for in an Kubota D722 Engine Parts
    - User-Friendly Interface
4. Exploring eBook Recommendations from Kubota D722 Engine Parts
    - Personalized Recommendations
    - Kubota D722 Engine Parts User Reviews and Ratings
    - Kubota D722 Engine Parts and Bestseller Lists
5. Accessing Kubota D722 Engine Parts Free and Paid eBooks
    - Kubota D722 Engine Parts Public Domain eBooks
    - Kubota D722 Engine Parts eBook Subscription Services
    - Kubota D722 Engine Parts Budget-Friendly Options
6. Navigating Kubota D722 Engine Parts eBook Formats

- ePub, PDF, MOBI, and More
- Kubota D722 Engine Parts Compatibility with Devices
- Kubota D722 Engine Parts Enhanced eBook Features

7. Enhancing Your Reading Experience
    - Adjustable Fonts and Text Sizes of Kubota D722 Engine Parts
    - Highlighting and Note-Taking Kubota D722 Engine Parts
    - Interactive Elements Kubota D722 Engine Parts
8. Staying Engaged with Kubota D722 Engine Parts
    - Joining Online Reading Communities
    - Participating in Virtual Book Clubs
    - Following Authors and Publishers Kubota D722 Engine Parts
9. Balancing eBooks and Physical Books Kubota D722 Engine Parts
    - Benefits of a Digital Library
    - Creating a Diverse Reading Collection Kubota D722 Engine Parts
10. Overcoming Reading Challenges
    - Dealing with Digital Eye Strain
    - Minimizing Distractions
    - Managing Screen Time
11. Cultivating a Reading Routine Kubota D722 Engine Parts
    - Setting Reading Goals Kubota D722 Engine Parts
    - Carving Out Dedicated Reading Time
12. Sourcing Reliable Information of Kubota D722 Engine Parts
    - Fact-Checking eBook Content of Kubota D722 Engine Parts
    - Distinguishing Credible Sources
13. Promoting Lifelong Learning
    - Utilizing eBooks for Skill Development
    - Exploring Educational eBooks
14. Embracing eBook Trends
    - Integration of Multimedia Elements
    - Interactive and Gamified eBooks

Kubota D722 Engine Parts Introduction

In the digital age, access to information has become easier than ever before. The ability to download Kubota D722 Engine Parts has revolutionized the way we consume written content. Whether you are a student looking for course material, an avid reader searching for your next favorite book, or a professional seeking research papers, the option to download Kubota D722 Engine Parts has opened up a world of possibilities. Downloading Kubota D722 Engine Parts provides numerous advantages over physical copies of books and documents. Firstly, it is incredibly convenient. Gone are the days of carrying around heavy textbooks or bulky folders filled with papers. With the click of a button, you can gain immediate access to valuable resources on any device. This convenience allows for efficient studying, researching, and reading on the go. Moreover, the cost-effective nature of downloading Kubota D722 Engine Parts has democratized knowledge. Traditional books and academic journals can be expensive, making it difficult for individuals with limited financial resources to access information. By offering free PDF downloads, publishers and authors are enabling a wider audience to benefit from their work. This inclusivity promotes equal opportunities for learning and personal growth. There are numerous websites and platforms where individuals can download Kubota D722 Engine Parts. These websites range from academic databases offering research papers and journals to online libraries with an expansive collection of books from various genres. Many authors and publishers also upload their work to specific websites, granting readers access to their content without any charge. These platforms not only provide access to existing literature but also serve as an excellent platform for undiscovered authors to share their work with the world. However, it is essential to be cautious while downloading Kubota D722 Engine Parts. Some websites may offer pirated or illegally obtained copies of copyrighted material. Engaging in such activities not only violates copyright laws but also undermines the efforts of authors, publishers, and researchers. To ensure ethical downloading, it is advisable to utilize reputable websites that prioritize the legal distribution of content. When downloading Kubota D722 Engine Parts, users should also consider the potential security risks associated with online platforms. Malicious actors may exploit vulnerabilities in unprotected websites to distribute malware or steal personal information. To protect themselves, individuals should ensure their devices have reliable antivirus software installed and validate the legitimacy of the websites they are downloading from. In conclusion, the ability to download Kubota D722 Engine Parts has transformed the way we access information. With the convenience, cost-effectiveness, and accessibility it offers, free PDF downloads have become a popular choice for students, researchers, and book lovers worldwide. However, it is crucial to engage in ethical downloading practices and prioritize personal security when utilizing online platforms. By doing so, individuals can make the most of the vast array of free PDF resources available and embark on a journey of continuous learning and intellectual growth.

FAQs About Kubota D722 Engine Parts Books

1. Where can I buy Kubota D722 Engine Parts books? Bookstores: Physical bookstores like Barnes & Noble, Waterstones, and independent local stores. Online Retailers: Amazon, Book Depository, and various online bookstores offer a wide range of books in physical and digital formats.
2. What are the different book formats available? Hardcover: Sturdy and durable, usually more expensive. Paperback: Cheaper, lighter, and more portable than hardcovers. E-books: Digital books available for e-readers like Kindle or software like Apple Books, Kindle, and Google Play Books.
3. How do I choose a Kubota D722 Engine Parts book to read? Genres: Consider the genre you enjoy (fiction, non-fiction, mystery, sci-fi, etc.). Recommendations: Ask friends, join book clubs, or explore online reviews and recommendations. Author: If you like a particular author, you might enjoy more of their work.
4. How do I take care of Kubota D722 Engine Parts books? Storage: Keep them away from direct sunlight and in a dry environment. Handling: Avoid folding pages, use bookmarks, and handle them with clean hands. Cleaning: Gently dust the covers and pages occasionally.
5. Can I borrow books without buying them? Public Libraries: Local libraries offer a wide range of books for borrowing. Book Swaps: Community book exchanges or online platforms where people exchange books.
6. How can I track my reading progress or manage my book collection? Book Tracking Apps: Goodreads, LibraryThing, and Book Catalogue are popular apps for tracking your reading progress and managing book collections. Spreadsheets: You can create your own spreadsheet to track books read, ratings, and other details.
7. What are Kubota D722 Engine Parts audiobooks, and where can I find them? Audiobooks: Audio recordings of books, perfect for listening while commuting or multitasking. Platforms: Audible, LibriVox, and Google Play Books offer a wide selection of audiobooks.
8. How do I support authors or the book industry? Buy Books: Purchase books from authors or independent bookstores. Reviews: Leave reviews on platforms like Goodreads or Amazon. Promotion: Share your favorite books on social media or recommend them to friends.
9. Are there book clubs or reading communities I can join? Local Clubs: Check for local book clubs in libraries or community centers. Online Communities: Platforms like Goodreads have virtual book clubs and discussion groups.
10. Can I read Kubota D722 Engine Parts books for free? Public Domain Books: Many classic books are available for free as theyre in the public domain. Free E-books: Some websites offer free e-books legally, like Project Gutenberg or Open Library.

Find Kubota D722 Engine Parts :

kaplan sat subject test biology em 2015 2016 kaplan test prep
~~k a stroud engineering mathematics 7th edition pdf book~~
juegos de cocina con sara paisdelosjuegos com mx
kangaroo contest past papers
kids book the terry treetop collection bedtime story beginner readers adventure animal stories teach values book funny story 3 8 prime rhymesfantasy education animal books for early beginner readers
killer poker online by john vorhaus
la machine infernale jean cocteau 1932 r sum
journeys grade 5 weekly unit tests
kelas 10 smk dasar dasar budidaya tanaman 2 scribd com
kindergarten pre decodables
knex js a sql query builder for javascript
jrr tolkien a biography humphrey carpenter
la catedral de turing george dyson libros maravillosos
kintex 7 fpga embedded targeted reference design
labormed pharma sa company profile emis

Kubota D722 Engine Parts :

grammatik kein problem a1 b1 spanisch ubungsgramm copy - Sep 22 2021

grammatik kein problem a1 b1 spanisch ubungsgramm pdf - Jun 12 2023
web merely said the grammatik kein problem a1 b1 spanisch ubungsgramm is universally compatible with any devices to read grammatik kein problem a1 b1 spanisch
grammatik kein problem a1 b1 spanisch übungsgrammatik - Jan 27 2022
web june 6th 2020 a grammatik ubungsgrammatik losung für später speichern 220152472 em ubungsgrammatik pdf hochgeladen von invisible kid grammatik kein problem a1 b1
grammatik kein problem a1 b1 spanisch amazon de - Jul 13 2023
web grammatik kein problem a1 b1 spanisch ubungsgramm grammatik ganz klar Übungsgrammatik mit cd rom hörübungen

und interaktive Übungen i ausgabe

grammatik kein problem a1 b1 spanisch übungsgrammatik - Dec 26 2021

web grammatik kein problem a1 b1 spanisch hueber verlag mit grammatik kein problem können die lernenden die deutsche grammatik kennenlernen und

grammatik kein problem a1 b1 spanisch übungsgrammatik - Jan 07 2023

web a2 b1 pdf free download b grammatik l o e su n g scribd c grammatik scribd lea grammatik kein problem a1 b1 spanisch de gloria best ubungsgrammatik documents

grammatik kein problem a1 b1 spanisch ubungsgramm wrbb neu - May 11 2023

web grammatik wortschatz spanisch ganz leicht niveau a1 b1 grammatik mit sinn und verstand grammatik aktiv deutsch als fremdsprache 2 aktualisierte ausgabe a1

grammatik kein problem a1 b1 französisch Üb schulsachen - Aug 02 2022

web lea grammatik kein problem a1 b1 spanisch de gloria june 5th 2020 lea grammatik kein problem a1 b1 spanisch de gloria bürsgens gratis con una prueba gratis por 30

grammatik kein problem a1 b1 spanisch übungsgrammatik - Dec 06 2022

web grammatik kein problem a1 b1 spanisch ubungsgramm mathematik einfach genial nov 27 2021 dieses buch lädt sie zum staunen ein erleben sie wie etwa archimedes

grammatik kein problem a1 b1 spanisch übungsgrammatik - Jul 01 2022

web niveau a1 b1 franziskus rebell und heiliger pons aufbaukurs spanisch sprachkenntnisse schnell verbessern niveau b1 la quete des heros perdus lea grammatik kein problem

grammatik kein problem a1 b1 spanisch ubungsgramm full - Nov 24 2021

web ubungsgrammatik scribd wortschatz einfach praktisch arabisch pdf free download hallo ihr lieben grammatik hallo ihr lieben ich hab das lea grammatik kein problem a1 b1

negation nicht oder kein Übungen a1 a2 kyros schule - Oct 04 2022

web grammar no problem third edition a2 b1 Übungsgrammatik englisch mit beiliegendem lösungsschlüsselmit interaktiven Übungen online bewährte struktur auf der linken

grammatik kein problem a1 b1 spanisch übungsgrammatik - Oct 24 2021

web grammatik wortschatz spanisch ganz leicht niveau a1 b1 grammatik kein problem a1 b1 französisch Übungsbuch Übungsgrammatik spanisch grammatik

grammatik kein problem a1 b1 spanisch übungsgrammatik - Mar 09 2023

web grammatik kein problem a1 b1 spanisch ubungsgramm 1 grammatik kein problem a1 b1 spanisch ubungsgramm as

recognized adventure as capably as experience

grammatik kein problem a1 b1 spanisch übungsgrammatik - Apr 29 2022

web Übungsgrammatik spanisch grammatik kein problem a1 b1 bod books on demand grammatik lernen leicht gemacht die Übungsgrammatik ist ideal für alle die

grammatik kein problem a1 b1 spanisch ubungsgramm full - Apr 10 2023

web grammatik kein problem a1 b1 spanisch übungsgrammatik spanish edition by gloria bürsgens april 10th 2020 an grammatik was für prüfungen auf den niveaus a1 a2 und

grammatik kein problem a1 b1 spanisch übungsgrammatik - May 31 2022

web informationen zum titel alle wichtigen bereiche der spanischen grammatik in etwa 40 kapiteln grammatik kein problem enthält Übungen die im schwierigkeitsgrad

grammar no problem third edition a2 b1 Übungsgrammatik - Sep 03 2022

web grammatik kein problem a1 b1 französisch Üb grammatik kein problem a1 b1 französisch Üb schneller zuverlässiger versand mit dhl europaweit

grammatik kein problem a1 b1 spanisch ubungsgramm - Feb 25 2022

web grammatik kein problem a1 b1 spanisch übungsgrammatik spanish edition by gloria bürsgens sprachkenntnisse schnell verbessern niveau b1 la quete des heros perdus

grammatik kein problem spanisch Übungsbuch a1 b1 - Aug 14 2023

web grammatik kein problem a1 b1 spanisch Übungsbuch mit interaktiven Übungen online bürsgens gloria isbn 9783061215347 kostenloser versand für alle bücher

grammatik kein problem a1 b1 spanisch ubungsgramm qr bonide - Mar 29 2022

web grammatik wortschatz spanisch ganz leicht niveau a1 b1 Übungsgrammatik englisch grammatik ganz klar Übungsgrammatik mit cd rom hörübungen und

grammatik kein problem a1 b1 spanisch ubungsgramm - Feb 08 2023

web ideen hueber übungen hueber verlag gmbh amp co lea grammatik kein problem a1 b1 spanisch de gloria lösungen b1 deutschkurs blog berlin deutschakademie a

pdf grammatik kein problem a1 b1 spanisch ubungsgramm - Nov 05 2022

web durch die beiden wörter nicht und kein können sie eine handlung einen ganzen satz oder ein satzglied verneinen aber viele personen stellen eine häufige frage wann

find momo a photography book google play - Feb 26 2023

web find momo a photography book ebook written by andrew knapp read this book using google play books app on your pc

android ios devices download for offline reading highlight bookmark or take notes while you read find momo a

find momo a photography book bookshop - Apr 18 2022

web play hide and seek with instagram s favorite border collie hiding in every page of this new york times best selling book of beautiful landscape photography momo and his best buddy andrew knapp travel all over through fields down country roads across cities and into yards neighborhoods and spaces of all sorts the result is a book of spectacular

find momo a photography book 1 paperback amazon com au - Nov 25 2022

web in his first book new york times bestseller find momo 2014 the reader is introduced to the hide and seek loving momo who is cleverly camouflaged in each photo his second book find momo coast to coast to be released may 19th 2015 and features photos of landmarks and odd finds on a road trip from coast to coast across the united states and

find momo a photography book amazon ca - Jan 28 2023

web mar 4 2014 13 66 have one to sell roll over image to zoom in follow the author andrew knapp find momo a photography book paperback illustrated march 4 2014 by andrew knapp author photographer 4 9 620 ratings part of find momo 6 books see all formats and editions kindle edition

find momo coast to coast a photography book kindle edition - May 20 2022

web may 12 2015 find momo coast to coast a photography book kindle edition by knapp andrew knapp andrew crafts hobbies home kindle ebooks amazon com kindle store kindle ebooks crafts hobbies home buy now with 1 click deliver to your kindle library not in a club follow the authors andrew knapp andrew knapp

find momo a photography book by andrew knapp goodreads - Oct 05 2023

web jan 1 2014 kindle 9 99 rate this book find momo 1 find momo a photography book andrew knapp 4 50 965 ratings224 reviews play hide and seek with instagram s favorite border collie hiding in every page of this new york times best selling book of beautiful landscape photography

find momo coast to coast a photography book paperback - Jun 20 2022

web may 12 2015 in his first book new york times bestseller find momo 2014 the reader is introduced to the hide and seek loving momo who is cleverly camouflaged in each photo his second book find momo coast to coast to be released may 19th 2015 and features photos of landmarks and odd finds on a road trip from coast to coast across the united

find momo coast to coast a photography book 2 amazon - Aug 23 2022

web hello sign in account lists returns orders cart

find momo a photography book amazon com - Sep 04 2023

web mar 4 2014 in his first book new york times bestseller find momo 2014 the reader is introduced to the hide and seek loving momo who is cleverly camouflaged in each photo his second book find momo coast to coast to be released may 19th

2015 and features photos of landmarks and odd finds on a road trip from coast to coast across the united

find momo coast to coast a photography book goodreads - Apr 30 2023

web may 12 2015 find momo coast to coast a photography book andrew knapp 4 57 417 ratings107 reviews momo loves to hide and you ll love looking for him in this follow up to find momo the canine instagram superstar and his best buddy andrew knapp travel across the united states and canada visiting iconic landmarks and unique off the map

find momo penguin random house - Jun 01 2023

web momo is a bandana wearing headtilting border collie who loves to tuck himself into beautiful photographs taken by his best buddy andrew knapp the duo s first books find momo find momo coast to coast and the children s board book let s find momo explored landmarks and little known places across the united states and canada

find momo a photography book by andrew knapp booktopia - Jul 22 2022

web jun 2 2014 product details play hide and seek with instagram s favorite border collie hiding in every page of this new york times best selling book of beautiful landscape photography momo and his best buddy andrew knapp travel all over through fields down country roads across cities and into yards neighborhoods and spaces of all sorts

find momo a photography book 1 paperback amazon singapore - Aug 03 2023

web hello sign in account lists returns orders cart

find momo a photography book knapp andrew - Dec 27 2022

web momo and his best buddy andrew knapp travel all over through fields down country roads across cities and into yards neighborhoods and spaces of all sorts the result is a book of spectacular photography that s also a game for kids or adults of all ages

find momo a photography book book by andrew knapp epic - Mar 30 2023

web find momo a photography book author andrew knapp start reading thousands of internet fans play hide and seek with momo the border collie every day and now in his new york times best selling book you can too momo and his best buddy book info ages 5 7 read time 30 45 mins ar level n a lexile n a similar books

find momo coast to coast a photography book 2 paperback - Mar 18 2022

web in his first book new york times bestseller find momo 2014 the reader is introduced to the hide and seek loving momo who is cleverly camouflaged in each photo his second book find momo coast to coast to be released may 19th 2015 and features photos of landmarks and odd finds on a road trip from coast to coast across the united states and

find momo a photography book andrew knapp google books - Jul 02 2023

web play hide and seek with instagram s favorite border collie hiding in every page of this new york times best selling book of beautiful landscape photography momo and his best buddy andrew knapp travel all over through fields down country roads

across cities and into yards neighborhoods and spaces of all sorts the result is a book of spectacular

find momo a photography book kindle edition amazon com au - Sep 23 2022

web in his first book new york times bestseller find momo 2014 the reader is introduced to the hide and seek loving momo who is cleverly camouflaged in each photo his second book find momo coast to coast to be released may 19th 2015 and features photos of landmarks and odd finds on a road trip from coast to coast across the united states and

find momo opentrolley bookstore singapore - Feb 14 2022

web by knapp andrew board books english 9781683693666 play hide and seek with adorable dogs yaya and boo in this joyful board book from the creator of the find momo series where is yaya and what mischief is boo getting into

find momo coast to coast a photography book 2 knapp - Oct 25 2022

web hello sign in account lists returns orders cart

what is an associate of applied science degree coursera - Aug 20 2022

web jun 16 2023 an associate of applied science aas is a two year degree that focuses more on career preparation than other types of associate degrees with this credential you can enter the workforce right away using the skills you ve developed and the knowledge you ve gained in school

tureng applied science türkçe İngilizce sözlük - Oct 02 2023

web uygulamalı bilimler alanında yüksek lisans derecesi abbreviation 5 kısaltma aas associate in applied science i uygulamalı bilimlerde ön lisans derecesi İngilizce türkçe online sözlük tureng kelime ve terimleri çevir ve farklı aksanlarda sesli dinleme applied science uygulamalı bilim associate in applied science ne demek

applied sciences instructions for authors mdpi - Apr 27 2023

web applied sciences instructions for authors share announcement instructions for authors shortcuts manuscript submission overview manuscript preparation preparing figures schemes and tables original images for blots and gels requirements supplementary materials data deposit and software source code research and publication ethics

sjr journal search scimago journal country rank - Dec 24 2022

web sjr journal search 1 50 of 85 international journal of bifurcation and chaos in applied sciences and engineering singapore world scientific publishing co pte ltd applied sciences switzerland switzerland multidisciplinary digital publishing institute mdpi mathematical models and methods in applied sciences singapore

applied in turkish cambridge dictionary - Feb 11 2022

web applied translate kendini dikkatini vermek learn more in the cambridge english turkish dictionary

thermo fisher scientific completes acquisition of ppd inc - Jun 17 2022

web dec 8 2021 thermo fisher scientific inc nyse tmo the world leader in serving science today announced that it has

completed its acquisition of ppd inc nasdaq ppd a leading global provider of clinical research services to the biopharma and biotech industry for 17 4 billion we are very excited to officially welcome our ppd colleagues to

applied science wikipedia - Mar 27 2023

web applied science is often contrasted with basic science which is focused on advancing scientific theories and laws that explain and predict natural or other phenomena 1 applied science can also apply formal science such as statistics and probability theory as in epidemiology

science bbc bitesize - Mar 15 2022

web science science is the systematic study of the physical and natural world through observation and experimentation part of learn revise 1st level science 2nd level science

prospective students applied science co op - May 17 2022

web apply for co op benefits up to 20 months of paid relevant work experience opportunities to develop a network of industry contacts and be mentored by professionals in your field up to 12 months of work credit towards your engineer in training status

the value of applied science nature communications - Jan 25 2023

web feb 3 2023 the value of applied science nature communications 14 article number 587 2023 cite this article 25k accesses 8 altmetric metrics every area of science can contribute to the changes that

science careers home bp - Feb 23 2023

web applied sciences as is a centralised scientific resource focussed on driving bp s transition into an efficient profitable net zero company applied sciences is the home for bp s scientists our deep expertise is built on a foundation of world class laboratory experimentation

applied sciences free full text solid electrolyte amperometric - Apr 15 2022

web mar 31 2022 the novelty of this research lies in the development of a simple reliable and fast solid oxide sensor for simultaneous sensing of co and co 2 in inert gases which can be used for the control of atmosphere in for example pharmaceutical chemical food storage industries

applied sciences about mdpi - Sep 20 2022

web the journal covers all aspects of applied physics applied chemistry engineering environmental and earth sciences and applied biology it has 5 broad subjects and 32 narrower sections biology life sciences applied biosciences and bioengineering applied dentistry and oral sciences biomedical engineering applied microbiology

sn applied sciences home springer - Nov 22 2022

web 1 day ago journal updates sn applied sciences is a multi disciplinary open access journal covering applied life sciences

chemistry earth and environmental sciences engineering materials science and physics

applied sciences free full text anomalous humidity - Jul 19 2022

web dec 30 2019 water affects the amplitude of photoacoustic signals from many gas phase molecules in quartz enhanced photoacoustic qepas measurements of co excited at the fundamental vibrational resonance of co the photoacoustic signal decreases with increasing humidity reaches a pronounced minimum at 0 19 v and increases with

10 types of applied sciences career paths and benefits - Jul 31 2023

web mar 10 2023 10 types of applied sciences there are many fields of applied sciences and each one has a variety of specializations here are 10 examples of different applied science fields 1 aerospace engineering this field uses applied sciences such as physics mathematics and chemistry to design and develop aircraft spacecraft and missiles

applied sciences nature - May 29 2023

web feb 1 2023 applied sciences submission status open this collection highlights research and commentary in applied science the range of topics is large spanning all scientific disciplines with the

applied sciences october 1 2022 browse articles mdpi - Oct 22 2022

web to enable use of the sciscco system in laboratory and hospital settings a cart based sciscco prototype system has also been developed first the sciscco system is applied in human studies to measure cerebral oxygenation and the redox state of cco in participants during an attention test protocol

school of applied sciences aydin - Sep 01 2023

web our university which provides education in 10 different campuses within the school of applied sciences which was established in the 2017 2018 academic year with the vision of being a leading higher education institution applied sciences school has enrolled students in management information systems software development and pilotage departments

applied sciences an open access journal from mdpi - Jun 29 2023

web applied sciences is an international peer reviewed open access journal on all aspects of applied natural sciences published semimonthly online by mdpi open access free for readers with article processing charges apc paid by authors or their institutions