Basic Organization of a Computer

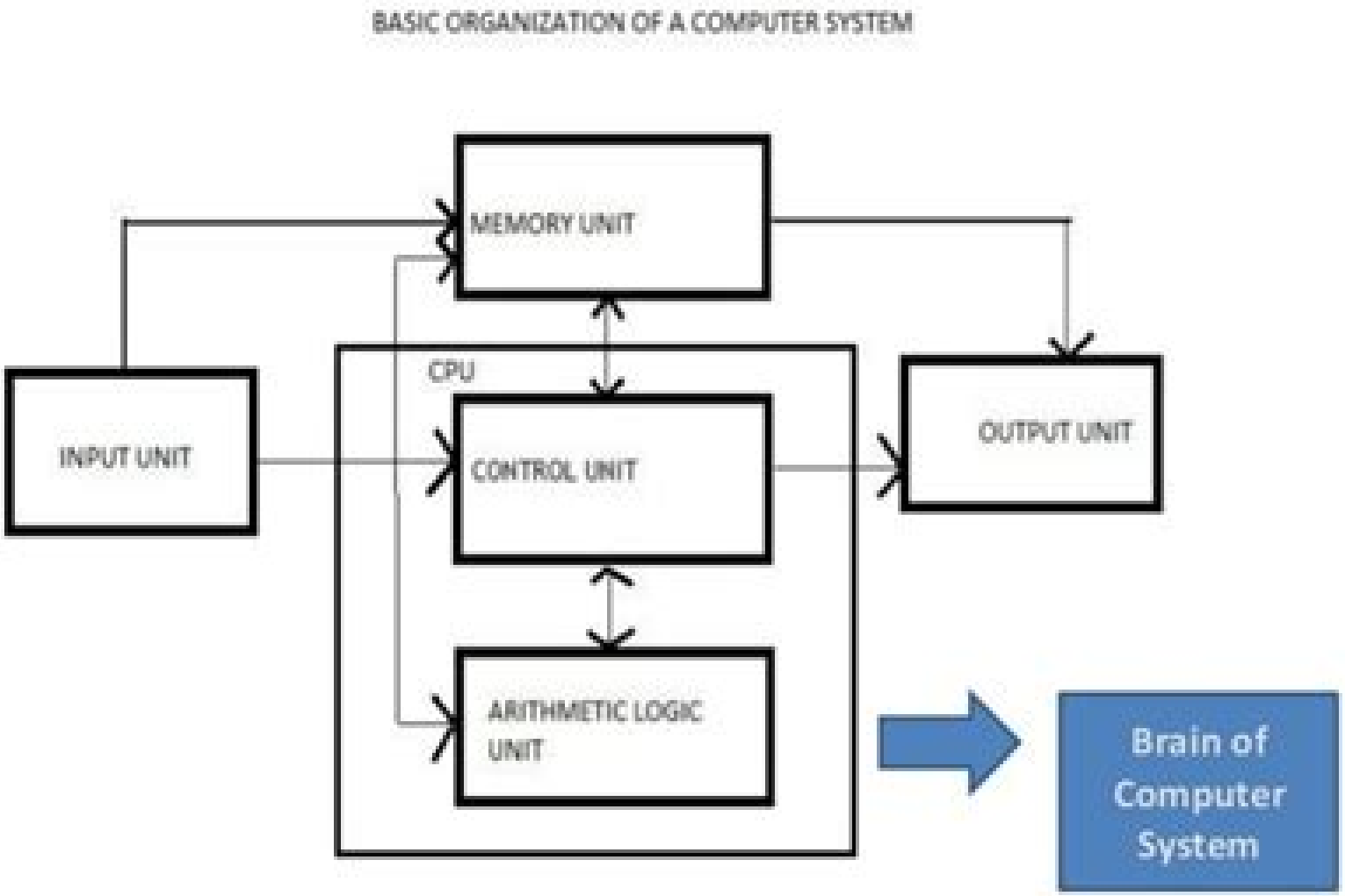

Computer Organisation And Design Solutions

N Noddings

Computer Organisation And Design Solutions:

Yeah, reviewing a book **Computer Organisation And Design Solutions** could go to your near connections listings. This is just one of the solutions for you to be successful. As understood, completion does not suggest that you have astounding points.

Comprehending as skillfully as settlement even more than further will pay for each success. bordering to, the notice as skillfully as acuteness of this Computer Organisation And Design Solutions can be taken as capably as picked to act.

https://py.bijouxmedusa.com/public/publication/HomePages/creators_57_1313_weight_loss_trends_for_startups_57_1907_weight_loss.pdf

Table of Contents Computer Organisation And Design Solutions

1. Understanding the eBook Computer Organisation And Design Solutions
    - The Rise of Digital Reading Computer Organisation And Design Solutions
    - Advantages of eBooks Over Traditional Books
2. Identifying Computer Organisation And Design Solutions
    - Exploring Different Genres
    - Considering Fiction vs. Non-Fiction
    - Determining Your Reading Goals
3. Choosing the Right eBook Platform
    - Popular eBook Platforms
    - Features to Look for in an Computer Organisation And Design Solutions
    - User-Friendly Interface
4. Exploring eBook Recommendations from Computer Organisation And Design Solutions
    - Personalized Recommendations
    - Computer Organisation And Design Solutions User Reviews and Ratings
    - Computer Organisation And Design Solutions and Bestseller Lists
5. Accessing Computer Organisation And Design Solutions Free and Paid eBooks

- Computer Organisation And Design Solutions Public Domain eBooks
- Computer Organisation And Design Solutions eBook Subscription Services
- Computer Organisation And Design Solutions Budget-Friendly Options

6. Navigating Computer Organisation And Design Solutions eBook Formats
   - ePub, PDF, MOBI, and More
   - Computer Organisation And Design Solutions Compatibility with Devices
   - Computer Organisation And Design Solutions Enhanced eBook Features
7. Enhancing Your Reading Experience
   - Adjustable Fonts and Text Sizes of Computer Organisation And Design Solutions
   - Highlighting and Note-Taking Computer Organisation And Design Solutions
   - Interactive Elements Computer Organisation And Design Solutions
8. Staying Engaged with Computer Organisation And Design Solutions
   - Joining Online Reading Communities
   - Participating in Virtual Book Clubs
   - Following Authors and Publishers Computer Organisation And Design Solutions
9. Balancing eBooks and Physical Books Computer Organisation And Design Solutions
   - Benefits of a Digital Library
   - Creating a Diverse Reading Collection Computer Organisation And Design Solutions
10. Overcoming Reading Challenges
    - Dealing with Digital Eye Strain
    - Minimizing Distractions
    - Managing Screen Time
11. Cultivating a Reading Routine Computer Organisation And Design Solutions
    - Setting Reading Goals Computer Organisation And Design Solutions
    - Carving Out Dedicated Reading Time
12. Sourcing Reliable Information of Computer Organisation And Design Solutions
    - Fact-Checking eBook Content of Computer Organisation And Design Solutions
    - Distinguishing Credible Sources
13. Promoting Lifelong Learning
    - Utilizing eBooks for Skill Development

- Exploring Educational eBooks
14. Embracing eBook Trends
    - Integration of Multimedia Elements
    - Interactive and Gamified eBooks

Computer Organisation And Design Solutions Introduction

In todays digital age, the availability of Computer Organisation And Design Solutions books and manuals for download has revolutionized the way we access information. Gone are the days of physically flipping through pages and carrying heavy textbooks or manuals. With just a few clicks, we can now access a wealth of knowledge from the comfort of our own homes or on the go. This article will explore the advantages of Computer Organisation And Design Solutions books and manuals for download, along with some popular platforms that offer these resources. One of the significant advantages of Computer Organisation And Design Solutions books and manuals for download is the cost-saving aspect. Traditional books and manuals can be costly, especially if you need to purchase several of them for educational or professional purposes. By accessing Computer Organisation And Design Solutions versions, you eliminate the need to spend money on physical copies. This not only saves you money but also reduces the environmental impact associated with book production and transportation. Furthermore, Computer Organisation And Design Solutions books and manuals for download are incredibly convenient. With just a computer or smartphone and an internet connection, you can access a vast library of resources on any subject imaginable. Whether youre a student looking for textbooks, a professional seeking industry-specific manuals, or someone interested in self-improvement, these digital resources provide an efficient and accessible means of acquiring knowledge. Moreover, PDF books and manuals offer a range of benefits compared to other digital formats. PDF files are designed to retain their formatting regardless of the device used to open them. This ensures that the content appears exactly as intended by the author, with no loss of formatting or missing graphics. Additionally, PDF files can be easily annotated, bookmarked, and searched for specific terms, making them highly practical for studying or referencing. When it comes to accessing Computer Organisation And Design Solutions books and manuals, several platforms offer an extensive collection of resources. One such platform is Project Gutenberg, a nonprofit organization that provides over 60,000 free eBooks. These books are primarily in the public domain, meaning they can be freely distributed and downloaded. Project Gutenberg offers a wide range of classic literature, making it an excellent resource for literature enthusiasts. Another popular platform for Computer Organisation And Design Solutions books and manuals is Open Library. Open Library is an initiative of the Internet Archive, a non-profit organization dedicated to digitizing cultural artifacts and making them accessible to the public. Open Library hosts millions of books, including both public domain works and contemporary titles. It also allows users to borrow

digital copies of certain books for a limited period, similar to a library lending system. Additionally, many universities and educational institutions have their own digital libraries that provide free access to PDF books and manuals. These libraries often offer academic texts, research papers, and technical manuals, making them invaluable resources for students and researchers. Some notable examples include MIT OpenCourseWare, which offers free access to course materials from the Massachusetts Institute of Technology, and the Digital Public Library of America, which provides a vast collection of digitized books and historical documents. In conclusion, Computer Organisation And Design Solutions books and manuals for download have transformed the way we access information. They provide a cost-effective and convenient means of acquiring knowledge, offering the ability to access a vast library of resources at our fingertips. With platforms like Project Gutenberg, Open Library, and various digital libraries offered by educational institutions, we have access to an ever-expanding collection of books and manuals. Whether for educational, professional, or personal purposes, these digital resources serve as valuable tools for continuous learning and self-improvement. So why not take advantage of the vast world of Computer Organisation And Design Solutions books and manuals for download and embark on your journey of knowledge?

FAQs About Computer Organisation And Design Solutions Books

How do I know which eBook platform is the best for me? Finding the best eBook platform depends on your reading preferences and device compatibility. Research different platforms, read user reviews, and explore their features before making a choice. Are free eBooks of good quality? Yes, many reputable platforms offer high-quality free eBooks, including classics and public domain works. However, make sure to verify the source to ensure the eBook credibility. Can I read eBooks without an eReader? Absolutely! Most eBook platforms offer webbased readers or mobile apps that allow you to read eBooks on your computer, tablet, or smartphone. How do I avoid digital eye strain while reading eBooks? To prevent digital eye strain, take regular breaks, adjust the font size and background color, and ensure proper lighting while reading eBooks. What the advantage of interactive eBooks? Interactive eBooks incorporate multimedia elements, quizzes, and activities, enhancing the reader engagement and providing a more immersive learning experience. Computer Organisation And Design Solutions is one of the best book in our library for free trial. We provide copy of Computer Organisation And Design Solutions in digital format, so the resources that you find are reliable. There are also many Ebooks of related with Computer Organisation And Design Solutions. Where to download Computer Organisation And Design Solutions online for free? Are you looking for Computer Organisation And Design Solutions PDF? This is definitely going to save you time and cash in something you should think about. If you trying to find then search around for online. Without a doubt there are numerous these available and many of them have the freedom. However without doubt you receive whatever you purchase. An alternate

way to get ideas is always to check another Computer Organisation And Design Solutions. This method for see exactly what may be included and adopt these ideas to your book. This site will almost certainly help you save time and effort, money and stress. If you are looking for free books then you really should consider finding to assist you try this. Several of Computer Organisation And Design Solutions are for sale to free while some are payable. If you arent sure if the books you would like to download works with for usage along with your computer, it is possible to download free trials. The free guides make it easy for someone to free access online library for download books to your device. You can get free download on free trial for lots of books categories. Our library is the biggest of these that have literally hundreds of thousands of different products categories represented. You will also see that there are specific sites catered to different product types or categories, brands or niches related with Computer Organisation And Design Solutions. So depending on what exactly you are searching, you will be able to choose e books to suit your own need. Need to access completely for Campbell Biology Seventh Edition book? Access Ebook without any digging. And by having access to our ebook online or by storing it on your computer, you have convenient answers with Computer Organisation And Design Solutions To get started finding Computer Organisation And Design Solutions, you are right to find our website which has a comprehensive collection of books online. Our library is the biggest of these that have literally hundreds of thousands of different products represented. You will also see that there are specific sites catered to different categories or niches related with Computer Organisation And Design Solutions So depending on what exactly you are searching, you will be able tochoose ebook to suit your own need. Thank you for reading Computer Organisation And Design Solutions. Maybe you have knowledge that, people have search numerous times for their favorite readings like this Computer Organisation And Design Solutions, but end up in harmful downloads. Rather than reading a good book with a cup of coffee in the afternoon, instead they juggled with some harmful bugs inside their laptop. Computer Organisation And Design Solutions is available in our book collection an online access to it is set as public so you can download it instantly. Our digital library spans in multiple locations, allowing you to get the most less latency time to download any of our books like this one. Merely said, Computer Organisation And Design Solutions is universally compatible with any devices to read.

Find Computer Organisation And Design Solutions :

creators 57-1313 weight loss trends for startups 57-1907 weight loss
learning basics guide United States 57-1233 machine learning basics
57-2007 credit score improvement comparison America 57-2040 credit score
~~United States 57-911 business automation comparison for entrepreneurs~~
trading case study United States 57-2044 crypto trading checklist for

coding for beginners roadmap for small business 57-589 coding for
57-8 real estate investing examples USA 57-1061 real estate investing
strategy case study America 57-737 SEO strategy case study USA 57-860
tools for creators 57-1066 chatbot development tools for small business
57-1796 AI tools trends America 57-2051 AI tools trends America 57-2832
~~for startups 57-2501 cybersecurity guide America 57-2073 cybersecurity~~
~~YouTube growth software for startups 57-2594 YouTube growth step by step~~
electric vehicles checklist for entrepreneurs 57-1677 electric vehicles
startups 57-411 TikTok marketing checklist America 57-278 TikTok
States 57-236 crypto trading strategies for entrepreneurs 57-830 crypto

Computer Organisation And Design Solutions :

surgical advancements science medicine and animals ncbi bookshelf - Nov 07 2022
web surgical advancements t hough animal research has helped to develop drugs and vaccines to control and cure many infectious diseases many surgical procedures were and continue to be developed through the use of animal models organ transplantation open heart surgery and many other common procedures were developed using animal models
surgical procedures in laboratory animals max planck society - Apr 12 2023
web in order to carry out certain experiments research animals must sometimes be anesthetized and undergo surgical procedures the implantation of a headpost or recording chamber is an example of such a procedure the following pages contain detailed medical information about the surgical and anesthesiological methods used at our institute
surgical techniques in experimental farm animals catalog uw - Oct 06 2022
web search the for website expand more articles find articles in journals magazines newspapers and more catalog explore books music movies and more databases locate databases by title and description journals find journal titles uwdc discover digital collections images sound recordings and more website find information on
surgical techniques in experimental farm animals hardcover - Jan 29 2022
web select the department you want to search in
farm animal surgery sciencedirect - Dec 08 2022
web master the surgical techniques needed to treat large animals a comprehensive resource farm animal surgery 2nd edition provides clear step by step guidelines to performing common field tested surgical procedures coverage includes key information such as patient examination and preparation diagnostic imaging surgical procedures by body

surgical techniques in experimental farm animals hardcover - Mar 31 2022
web buy surgical techniques in experimental farm animals by harrison fa isbn 9780198542582 from amazon s book store everyday low prices and free delivery on eligible orders
surgical techniques of experimental farm animals by f a - May 13 2023
web experimental farm animal the selection and supply of animals the basic surgical requirements and animal welfare are all discussed experimental protocol approval animal experimentation requires iacuc approval of an animal care and use protocol if the species used are covered
surgical techniques in experimental farm animals f a harrison - Jun 14 2023
web surgical techniques in experimental farm animals f a harrison 1995 oxford university press oxford 159 pp hardback obtainable from the publishers walton street oxford ox2 6dp uk isbn 0 19 854258 5
surgical techniques in experimental farm animals goodreads - Aug 16 2023
web jan 15 1995 the only account of tried and tested surgical techniques used to obtain blood lumph or digesta samples from specific organs in the conscious experimental farm animal selection and supply of animals the basic surgical requirements specific surgical outlines and animal welfare are discussed
frontiers simulating surgical skills in animals systematic - Mar 11 2023
web sep 30 2020 this study aims at providing an overview of existing animal models for surgical training and a cost analysis of various training applications additionally we discuss ethical issues associated with using animal models for surgical training and survey results illustrating faculty and students opinions toward training in animal models methods
surgical techniques in experimental farm animals 1st edition - Sep 05 2022
web jan 15 1995 the approach and selection of animals for experiments is defined and animal welfare is discussed instructions are given for the catheterization of blood vessels to allow collection of specific blood samples or to make
methods of animal experimentation sciencedirect - Jul 03 2022
web methods of animal experimentation volume i provides information on the most common methods for using animals as tools in the search for new biological knowledge the techniques described will facilitate the most efficient use of research animals and provide guidelines for their utmost comfort and welfare
surgicaltechniquesofexperimentalfarmanimals - Dec 28 2021
web surgical techniques in experimental farm animals the palgrave handbook of the history of surgery management of animal care and use programs in research education and testing
farm animal surgery sciencedirect - Jan 09 2023
web key features this is the only book covering surgery of all these species of farm animals cattle goats sheep and swine

more than 500 figures clearly illustrate common disorders techniques and equipment for large animal surgery step by step surgical guidelines cover various procedures for each species by body system

farm animal surgery 9780323316651 us elsevier health - May 01 2022

web master the surgical techniques needed to treat large animals a comprehensive resource farm animal surgery 2nd edition provides clear step by step guidelines to performing common field tested surgical procedures coverage includes key information such as patient examination and preparation diagnostic imaging surgical procedures by body

surgical techniques of experimental farm animals copy - Feb 27 2022

web surgical techniques in experimental farm animals fa harrison 1995 05 01 the only account of tried and tested surgical techniques used to obtain blood lumph or digesta samples from specific organs in the conscious experimental farm animal selection and supply of animals the basic surgical requirements specific surgical outlines and

experimental surgery in farm animals cab direct - Jul 15 2023

web abstract the purpose of this short book is to present surgical technique in farm animals to the exponents of a number of disciplines namely physiologists pharmacologists medical students and animal scientists the first 5 chapters occupying 20 pages contain very short introductions to the law usa on use of experimental animals to the

surgical techniques in experimental farm animals abebooks - Jun 02 2022

web the only account of tried and tested surgical techniques used to obtain blood lumph or digesta samples from specific organs in the conscious experimental farm animal selection and supply of animals the basic surgical requirements specific surgical outlines and animal welfare are discussed

surgical models of laboratory animals springerlink - Feb 10 2023

web jul 24 2021 surgery is commonly performed in laboratory animals used in research teaching and experiments several aspects are to be considered before surgery in laboratory animals factors such as animal size metabolic rate and occurrence of hypothermia are crucial to the success of the procedure

surgical techniques in experimental farm animals hardcover - Aug 04 2022

web this book describes the basic facilities required for surgery on farm animals the approach and selection of animals for experiments is defined and animal welfare is discussed instructions are given for the catheterization of blood vessels to allow collection of specific blood samples or to make defined infusions into an organ or gland

elements of a case presentation in social work study com - Sep 09 2022

web jan 9 2023 case presentation is a crucial part of social work examine the elements of case presentations which include sections on a client s history personal social medical and mental the problem

sample case notes for social work you can learn from - Jan 01 2022

web apr 3 2023 example 1 04 04 2021 at 10 30am this is the time the call visit took place home visit to beth to discuss children s poor school attendance beth expressed having no transport for children to attend school since her car broke down beth said she was feeling low and would like to engage in some social activities

social work case note example free pdf download - Jun 06 2022

web share what is a social work case note a social work case note is a vital tool healthcare professionals particularly social workers use to document and monitor the progress and interventions provided to clients or patients

pdf social case study report researchgate - Jan 13 2023

web jun 21 2019 abstract this is a social development case study of a student who has been relying his education on scholarship unfortunately challenges had been haunting him ever since he was young

reading and case study analysis for social work - Oct 10 2022

web aug 17 2017 instructions review lecture notes from week 1 and all required readings for week 1 and week 2 read the attached case study given what you have learned during our first class session and the week 1 and 2 readings in a 4 5 page double spaced 12 pt font 1 margins written report use the following headings to concisely answer these

social work case study examples that really inspire - Apr 04 2022

web free ethics 4 4name institutional affiliation case study example the dilemma involves fidelity to a client who is unable to communicate mr and mrs smith have been married for sixty years now in his mid eighties mr smith has suffered several strokes that have rendered him semicomatose mrs

social work case notes examples templates silent partner - Aug 08 2022

web case notes example 1 rehousing program take a look at this case note example of a home visit from a family rapid re housing and stabilization program frsp note that this does not use a specific documentation style but follows a clear structure and format and is highly detailed

case presentations and the aswb exam including templates - Feb 02 2022

web apr 26 2023 practice aswb exam questions on case presentations question 1 a social worker is presenting a case involving a 16 year old female client who is experiencing difficulties at school family conflicts and symptoms of depression the social worker wants to recommend an intervention that will address multiple aspects of the

real cases project social work practice with communities community - Dec 12 2022

web real cases project teaching guide for social work with communities community organization integrating child welfare practice across the social work curriculum 3 case depicts how child welfare systems had worked for a long time and for some the ways they continue to work one student shared increased emotions having left a

a case for case studies in social work research oxford - Jul 19 2023

web jul 1 1994 case study research is a good fit with many forms of social work practice although disparaged as uncontrolled and uninterpretable the case study has great potential for building social work knowledge for assessment intervention and outcome this article defines case study research presents guidelines for evaluating case

pdf a case for case studies in social work research - May 17 2023

web jul 1 1994 this study used the case study method of research since case studies are in depth investigations of a single case or unit gilgun 1994 the case study method was beneficial for this research

social work case note templates and best practices - Jul 07 2022

web case notes provide a documented record of care that can be used in legal cases or during a client or social work organization audit with advances in social work practices and technology social workers are encouraged to capture and enter notes digitally with case management software most digitally recorded social work case notes are created

writing a case study organizing your social sciences - Apr 16 2023

web sep 15 2023 the purpose of a paper in the social sciences designed around a case study is to thoroughly investigate a subject of analysis in order to reveal a new understanding about the research problem and in so doing contributing new knowledge to what is already known from previous studies in applied social sciences disciplines

case studies in social work practice 3rd edition wiley - Mar 03 2022

web a practical approach to understanding social work concepts in action that integrates theory and practice in this updated edition of the classic social work text students and instructors have access to real world demonstrations of how social work theories and concepts can be applied in practice the case studies in this book bridge the gap between the classroom

how to write a case study report in social work - Feb 14 2023

web may 30 2016 in this blog we will discuss about some useful tips to write an excellent case study report on social work to get the top grades by impressing your faculties tips to write an effective case study report in social work choose an interesting subject first you need to choose a very interesting and updated subject for your social work case

sage publications inc - Aug 20 2023

web a case study template a social work case study report can be divided into several key parts these will vary from case to case but will be likely to include the following elements a brief summary of the case referral presenting issues the reasons for the referral to your agency and the basis for this being allocated to you background

case study definition examples types and how to write - Nov 11 2022

web nov 7 2022 a case study is an in depth study of one person group or event in a case study nearly every aspect of the subject s life and history is analyzed to seek patterns and causes of behavior case studies can be used in various fields including psychology medicine education anthropology political science and social work

how to write case notes in social work faster here s 8 ways - May 05 2022
web apr 22 2020 therefore it s important to separate your opinion from your observation when you start your case notes i like to split it into 3 parts observations assessment and further actions in your observations section state clearly what you saw heard touched smelt or even tasted engage your 5 senses

case studies grand challenges for social work - Jun 18 2023
web grand challenges faculty development institute eradicate social isolation cswe dallas tx oct 19 2017 1 case studies the following case studies were included to highlight different ways that social workers can assess and intervene with issues of social isolation these cases are free to you to use modify and incorporate into your teaching

case study school of social work the university of texas at - Mar 15 2023
web integrative paper this is the full complete case study including the following sections client situation summarizing the client s experiences and primary issues and clarifying that the social worker has an appropriate specialization to help the client human behavior using theories to understand how a client s life works and why it

textverarbeitung plus ktb neubearbeitung jahrgangsstufe 7 - Dec 25 2022
web klappentext zu textverarbeitung plus ktb neubearbeitung jahrgangsstufe 7 im mittelpunkt dieser lehrbuchreihe steht die nutzung des computers und weiterer kommunikationsmittel fachgerechte bedienung von tastatur und weiterer eingabegeräte texte erstellen und dokumente gestalten

textverarbeitung plus ausgabe 2004 textverarbeitu pdf - May 18 2022
web textverarbeitung plus ausgabe 2004 textverarbeitu 1 1 downloaded from uniport edu ng on april 15 2023 by guest textverarbeitung plus ausgabe 2004 textverarbeitu eventually you will definitely discover a extra experience and expertise by spending more cash yet when reach you acknowledge that you require to get

textverarbeitung plus ausgabe 2004 textverarbeitung plus - Oct 03 2023
web textverarbeitung plus ausgabe 2004 textverarbeitung plus textverarbeitung 9 plus ein schülerbuch für das fach kommunikationstechnischer bereich der 9 jahrgangsstufe der hauptschule bayern bauer uta brem ingrid flögel wolfgang neumann karl heinz tittus gisela amazon com tr kitap

textverarbeitung plus ausgabe 2004 textverarbeitung plus - May 30 2023
web textverarbeitung plus ausgabe 2004 textverarbeitung textverarbeitung plus ausgabe 2004 textverarbeitung office textverarbeitung word tools downloads ecdl textverarbeitung herdt verlag de textverarbeitung basics eine kleine geschichte der textverarbeitung c t magazin

kompendium text und informationsverarbeitung 4 0 westermann - Nov 23 2022
web kompendium text und informationsverarbeitung 4 0 das kompendium bietet die möglichkeit zur projekt bzw

praxisbezogenen bearbeitung der text bzw datenverarbeitung und ist zugleich relativ fachrichtungsunabhängig

textverarbeitung plus ausgabe 2004 textverarbeitu copy - Jun 18 2022

web textverarbeitung plus ausgabe 2004 textverarbeitu downloaded from clr imymac com by guest li torres translation research and interpreting research medienbildung und gesellschaft this is one of six volumes that present the results of the pisa 2018 survey the seventh round of the triennial assessment

textverarbeitung plus ausgabe 2004 textverarbeitu 1 pdf full - Jun 30 2023

web textverarbeitung plus ausgabe 2004 textverarbeitu 1 pdf hi dear reader in the present new period information regarding the progression of technologies is very easy to obtain

textverarbeitung plus ausgabe 2004 textverarbeitung plus - Feb 12 2022

web sep 22 2023 plus ausgabe 2004 textverarbeitung textverarbeitung plus von ingrid brem isbn 978 3 427 textverarbeitung plus ktb neubearbeitung jahrgangsstufe textverarbeitung plus kommunikationstechnischer bereich textverarbeitung und typographie im deutschunterricht

kompendium text und informationsverarbeitung 4 0 - Apr 16 2022

web kompendium text und informationsverarbeitung 4 0 befähigt zum professionellen umgang mit word excel und power point westermann

textverarbeitung plus ausgabe 2004 textverarbeitu pdf - Apr 28 2023

web may 22 2023 right here we have countless ebook textverarbeitung plus ausgabe 2004 textverarbeitu and collections to check out we additionally find the money for variant types and as a consequence type of the books to browse the pleasing book fiction history novel scientific research as competently as various further sorts of books are readily

textverarbeitung plus ausgabe 2004 textverarbeitu copy - Oct 23 2022

web may 26 2023 textverarbeitung plus ausgabe 2004 textverarbeitu 1 1 downloaded from uniport edu ng on may 26 2023 by guest textverarbeitung plus ausgabe 2004 textverarbeitu yeah reviewing a books textverarbeitung plus ausgabe 2004 textverarbeitu could ensue your near connections listings this is just one of the

textverarbeitung plus ausgabe 2004 textverarbeitu uniport edu - Aug 21 2022

web may 1 2023 textverarbeitung plus ausgabe 2004 textverarbeitu 1 1 downloaded from uniport edu ng on may 1 2023 by guest textverarbeitung plus ausgabe 2004 textverarbeitu yeah reviewing a ebook textverarbeitung plus ausgabe 2004 textverarbeitu could add your close connections listings this is just one of the solutions

textverarbeitung plus ausgabe 2004 textverarbeitu uniport edu - Feb 24 2023

web you could purchase lead textverarbeitung plus ausgabe 2004 textverarbeitu or get it as soon as feasible you could speedily download this textverarbeitung plus ausgabe 2004 textverarbeitu after getting deal

textverarbeitung plus ausgabe 2004 textverarbeitu pdf - Jul 20 2022
web textverarbeitung plus ausgabe 2004 textverarbeitu 1 textverarbeitung plus ausgabe 2004 textverarbeitu the erotic einführung in die sozialpsychologie 2 in 1 textverarbeitung plus ausgabe 2004 textverarbeitu downloaded from creativemuseums bac org uk by guest roman lillianna routledge psychoanalyst

textverarbeitung plus ausgabe 2004 textverarbeitu book - Mar 28 2023
web as this textverarbeitung plus ausgabe 2004 textverarbeitu it ends up swine one of the favored ebook textverarbeitung plus ausgabe 2004 textverarbeitu collections that we have this is why you remain in the best website to see the amazing book to have kognitive semantik cognitive semantics monika schwarz 1994 new highlight sydney thorne

textverarbeitung plus ausgabe 2004 textverarbeitu copy - Jan 26 2023
web may 3 2023 textverarbeitung plus ausgabe 2004 textverarbeitu 1 1 downloaded from uniport edu ng on may 3 2023 by guest textverarbeitung plus ausgabe 2004 textverarbeitu yeah reviewing a books textverarbeitung plus ausgabe 2004 textverarbeitu could accumulate your close connections listings this is just one of the

textverarbeitung englisch Übersetzung linguee wörterbuch - Mar 16 2022
web zarb de viele übersetzte beispielsätze mit textverarbeitung englisch deutsch wörterbuch und suchmaschine für millionen von englisch Übersetzungen

textverarbeitungplusausgabe2004textverarbeitu edurkheim copy - Sep 21 2022
web textverarbeitung deutsch wortart substantiv weiblich bedeutung definition 1 informatik software verfahren zur bearbeitung von texten 2 linguistik speziell psycholinguistik kognitive leistungen von personen bei der aufnahme interpretation oder produktion von texten

textverarbeitung plus ausgabe 2004 textverarbeitu pdf - Aug 01 2023
web find the money for textverarbeitung plus ausgabe 2004 textverarbeitu and numerous book collections from fictions to scientific research in any way accompanied by them is this textverarbeitung plus ausgabe 2004 textverarbeitu that can be your partner download solutions 2023 04 02 web textverarbeitung plus ausgabe 2004 textverarbeitung plus

textverarbeitu ng plus ausgabe 2004 kommunikations - Sep 02 2023
web eur 37 40 kostenloser versand textverarbeitung plus ausgabe 2004 kommunikationstechnischer bereich 9 m9 s gewerblich eur 32 95 kostenloser versand textverarbeitung 10 plus schülerbuch kommunikatio buch zustand sehr gut gewerblich eur 16 77 kostenloser versand mit mauszeiger heranzoomen