16x2 LCD interfacing to 8051 microcontroller

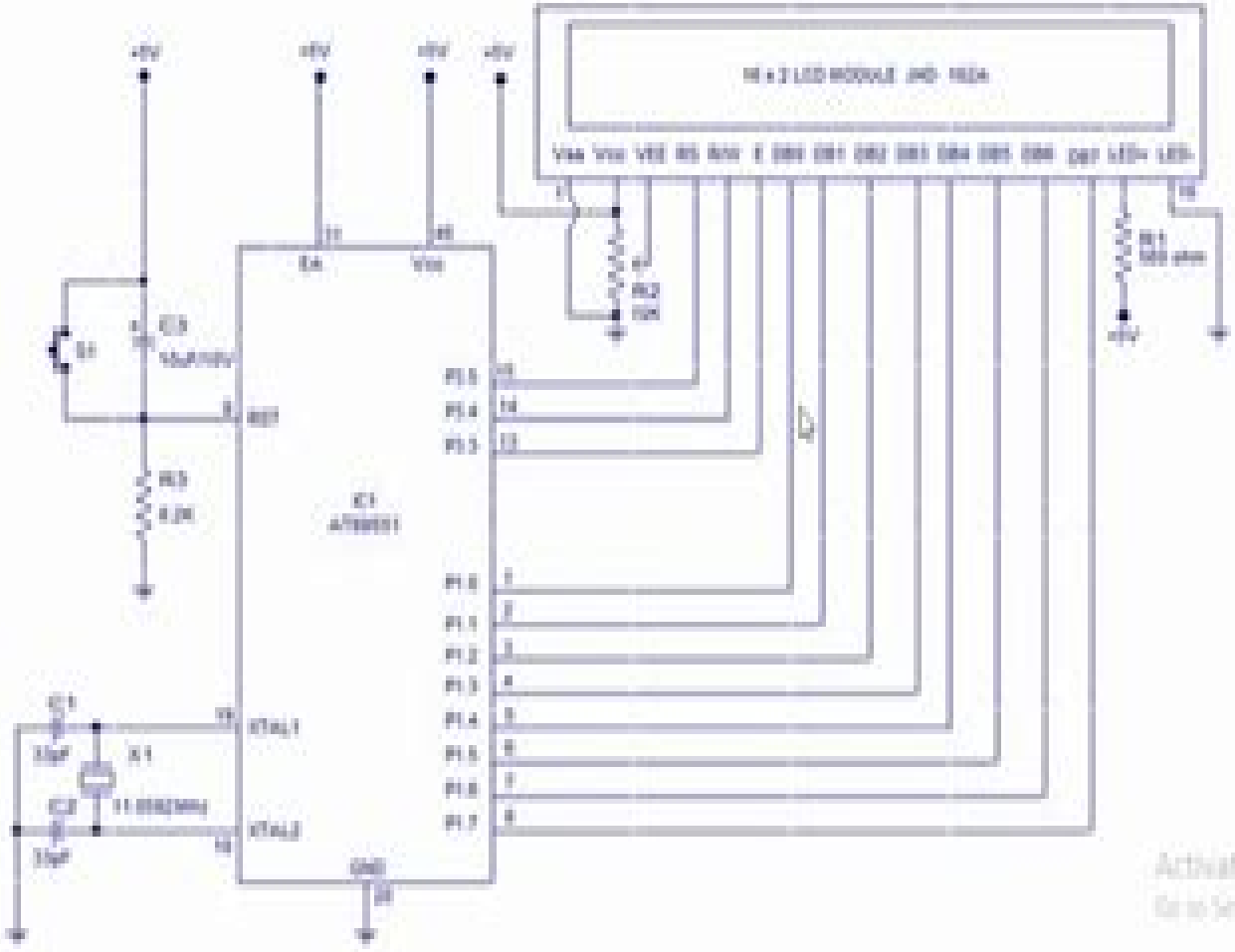

Activate Windows
Go to Settings to activate Windows.

Interfacing 16x2 Lcd With 8051 Microcontroller Lcd Module

Dr. Rajesh Parate, Dr. Sachin Bahade
& Mr. Pravin Sontakke

Interfacing 16x2 Lcd With 8051 Microcontroller Lcd Module:

Getting the books **Interfacing 16x2 Lcd With 8051 Microcontroller Lcd Module** now is not type of challenging means. You could not isolated going in imitation of book deposit or library or borrowing from your friends to edit them. This is an categorically easy means to specifically get guide by on-line. This online revelation Interfacing 16x2 Lcd With 8051 Microcontroller Lcd Module can be one of the options to accompany you when having other time.

It will not waste your time. consent me, the e-book will categorically broadcast you extra event to read. Just invest little grow old to log on this on-line statement **Interfacing 16x2 Lcd With 8051 Microcontroller Lcd Module** as capably as evaluation them wherever you are now.

https://py.bijouxmedusa.com/public/publication/index.jsp/dbq%20focus%20the%20scientific%20revolution%20answers.pdf

Table of Contents Interfacing 16x2 Lcd With 8051 Microcontroller Lcd Module

1. Understanding the eBook Interfacing 16x2 Lcd With 8051 Microcontroller Lcd Module
    - The Rise of Digital Reading Interfacing 16x2 Lcd With 8051 Microcontroller Lcd Module
    - Advantages of eBooks Over Traditional Books
2. Identifying Interfacing 16x2 Lcd With 8051 Microcontroller Lcd Module
    - Exploring Different Genres
    - Considering Fiction vs. Non-Fiction
    - Determining Your Reading Goals
3. Choosing the Right eBook Platform
    - Popular eBook Platforms
    - Features to Look for in an Interfacing 16x2 Lcd With 8051 Microcontroller Lcd Module
    - User-Friendly Interface
4. Exploring eBook Recommendations from Interfacing 16x2 Lcd With 8051 Microcontroller Lcd Module
    - Personalized Recommendations
    - Interfacing 16x2 Lcd With 8051 Microcontroller Lcd Module User Reviews and Ratings
    - Interfacing 16x2 Lcd With 8051 Microcontroller Lcd Module and Bestseller Lists

5. Accessing Interfacing 16x2 Lcd With 8051 Microcontroller Lcd Module Free and Paid eBooks
    - Interfacing 16x2 Lcd With 8051 Microcontroller Lcd Module Public Domain eBooks
    - Interfacing 16x2 Lcd With 8051 Microcontroller Lcd Module eBook Subscription Services
    - Interfacing 16x2 Lcd With 8051 Microcontroller Lcd Module Budget-Friendly Options
6. Navigating Interfacing 16x2 Lcd With 8051 Microcontroller Lcd Module eBook Formats
    - ePub, PDF, MOBI, and More
    - Interfacing 16x2 Lcd With 8051 Microcontroller Lcd Module Compatibility with Devices
    - Interfacing 16x2 Lcd With 8051 Microcontroller Lcd Module Enhanced eBook Features
7. Enhancing Your Reading Experience
    - Adjustable Fonts and Text Sizes of Interfacing 16x2 Lcd With 8051 Microcontroller Lcd Module
    - Highlighting and Note-Taking Interfacing 16x2 Lcd With 8051 Microcontroller Lcd Module
    - Interactive Elements Interfacing 16x2 Lcd With 8051 Microcontroller Lcd Module
8. Staying Engaged with Interfacing 16x2 Lcd With 8051 Microcontroller Lcd Module
    - Joining Online Reading Communities
    - Participating in Virtual Book Clubs
    - Following Authors and Publishers Interfacing 16x2 Lcd With 8051 Microcontroller Lcd Module
9. Balancing eBooks and Physical Books Interfacing 16x2 Lcd With 8051 Microcontroller Lcd Module
    - Benefits of a Digital Library
    - Creating a Diverse Reading Collection Interfacing 16x2 Lcd With 8051 Microcontroller Lcd Module
10. Overcoming Reading Challenges
    - Dealing with Digital Eye Strain
    - Minimizing Distractions
    - Managing Screen Time
11. Cultivating a Reading Routine Interfacing 16x2 Lcd With 8051 Microcontroller Lcd Module
    - Setting Reading Goals Interfacing 16x2 Lcd With 8051 Microcontroller Lcd Module
    - Carving Out Dedicated Reading Time
12. Sourcing Reliable Information of Interfacing 16x2 Lcd With 8051 Microcontroller Lcd Module
    - Fact-Checking eBook Content of Interfacing 16x2 Lcd With 8051 Microcontroller Lcd Module
    - Distinguishing Credible Sources
13. Promoting Lifelong Learning

- Utilizing eBooks for Skill Development
- Exploring Educational eBooks

14. Embracing eBook Trends
    - Integration of Multimedia Elements
    - Interactive and Gamified eBooks

Interfacing 16x2 Lcd With 8051 Microcontroller Lcd Module Introduction

Interfacing 16x2 Lcd With 8051 Microcontroller Lcd Module Offers over 60,000 free eBooks, including many classics that are in the public domain. Open Library: Provides access to over 1 million free eBooks, including classic literature and contemporary works. Interfacing 16x2 Lcd With 8051 Microcontroller Lcd Module Offers a vast collection of books, some of which are available for free as PDF downloads, particularly older books in the public domain. Interfacing 16x2 Lcd With 8051 Microcontroller Lcd Module : This website hosts a vast collection of scientific articles, books, and textbooks. While it operates in a legal gray area due to copyright issues, its a popular resource for finding various publications. Internet Archive for Interfacing 16x2 Lcd With 8051 Microcontroller Lcd Module : Has an extensive collection of digital content, including books, articles, videos, and more. It has a massive library of free downloadable books. Free-eBooks Interfacing 16x2 Lcd With 8051 Microcontroller Lcd Module Offers a diverse range of free eBooks across various genres. Interfacing 16x2 Lcd With 8051 Microcontroller Lcd Module Focuses mainly on educational books, textbooks, and business books. It offers free PDF downloads for educational purposes. Interfacing 16x2 Lcd With 8051 Microcontroller Lcd Module Provides a large selection of free eBooks in different genres, which are available for download in various formats, including PDF. Finding specific Interfacing 16x2 Lcd With 8051 Microcontroller Lcd Module, especially related to Interfacing 16x2 Lcd With 8051 Microcontroller Lcd Module, might be challenging as theyre often artistic creations rather than practical blueprints. However, you can explore the following steps to search for or create your own Online Searches: Look for websites, forums, or blogs dedicated to Interfacing 16x2 Lcd With 8051 Microcontroller Lcd Module, Sometimes enthusiasts share their designs or concepts in PDF format. Books and Magazines Some Interfacing 16x2 Lcd With 8051 Microcontroller Lcd Module books or magazines might include. Look for these in online stores or libraries. Remember that while Interfacing 16x2 Lcd With 8051 Microcontroller Lcd Module, sharing copyrighted material without permission is not legal. Always ensure youre either creating your own or obtaining them from legitimate sources that allow sharing and downloading. Library Check if your local library offers eBook lending services. Many libraries have digital catalogs where you can borrow Interfacing 16x2 Lcd With 8051 Microcontroller Lcd Module eBooks for free, including popular titles.Online Retailers: Websites like Amazon, Google Books, or Apple Books often sell eBooks. Sometimes, authors or publishers offer promotions or free periods for certain

books.Authors Website Occasionally, authors provide excerpts or short stories for free on their websites. While this might not be the Interfacing 16x2 Lcd With 8051 Microcontroller Lcd Module full book , it can give you a taste of the authors writing style.Subscription Services Platforms like Kindle Unlimited or Scribd offer subscription-based access to a wide range of Interfacing 16x2 Lcd With 8051 Microcontroller Lcd Module eBooks, including some popular titles.

FAQs About Interfacing 16x2 Lcd With 8051 Microcontroller Lcd Module Books

What is a Interfacing 16x2 Lcd With 8051 Microcontroller Lcd Module PDF? A PDF (Portable Document Format) is a file format developed by Adobe that preserves the layout and formatting of a document, regardless of the software, hardware, or operating system used to view or print it. **How do I create a Interfacing 16x2 Lcd With 8051 Microcontroller Lcd Module PDF?** There are several ways to create a PDF: Use software like Adobe Acrobat, Microsoft Word, or Google Docs, which often have built-in PDF creation tools. Print to PDF: Many applications and operating systems have a "Print to PDF" option that allows you to save a document as a PDF file instead of printing it on paper. Online converters: There are various online tools that can convert different file types to PDF. **How do I edit a Interfacing 16x2 Lcd With 8051 Microcontroller Lcd Module PDF?** Editing a PDF can be done with software like Adobe Acrobat, which allows direct editing of text, images, and other elements within the PDF. Some free tools, like PDFescape or Smallpdf, also offer basic editing capabilities. **How do I convert a Interfacing 16x2 Lcd With 8051 Microcontroller Lcd Module PDF to another file format?** There are multiple ways to convert a PDF to another format: Use online converters like Smallpdf, Zamzar, or Adobe Acrobats export feature to convert PDFs to formats like Word, Excel, JPEG, etc. Software like Adobe Acrobat, Microsoft Word, or other PDF editors may have options to export or save PDFs in different formats. **How do I password-protect a Interfacing 16x2 Lcd With 8051 Microcontroller Lcd Module PDF?** Most PDF editing software allows you to add password protection. In Adobe Acrobat, for instance, you can go to "File" -> "Properties" -> "Security" to set a password to restrict access or editing capabilities. Are there any free alternatives to Adobe Acrobat for working with PDFs? Yes, there are many free alternatives for working with PDFs, such as: LibreOffice: Offers PDF editing features. PDFsam: Allows splitting, merging, and editing PDFs. Foxit Reader: Provides basic PDF viewing and editing capabilities. How do I compress a PDF file? You can use online tools like Smallpdf, ILovePDF, or desktop software like Adobe Acrobat to compress PDF files without significant quality loss. Compression reduces the file size, making it easier to share and download. Can I fill out forms in a PDF file? Yes, most PDF viewers/editors like Adobe Acrobat, Preview (on Mac), or various online tools allow you to fill out forms in PDF files by selecting text fields and entering information. Are there any restrictions when working with PDFs? Some PDFs might have restrictions set by their creator, such as password protection, editing

restrictions, or print restrictions. Breaking these restrictions might require specific software or tools, which may or may not be legal depending on the circumstances and local laws.

Find Interfacing 16x2 Lcd With 8051 Microcontroller Lcd Module :

~~dbq focus the scientific revolution answers~~
derr telo de amor gratis online libro descargar
database system concepts 4th edition solution manual
david chipperfield
david g myers psychology 10th edition test bank pdf
dante agostini r
~~danmachi light novel volume 11 danmachi wiki fandom~~
delphi user manual
daft management 11th edition
dear all you are kindly reminded that the deadline of the
~~delta cad manual~~
daewoo cnc machining centre manuals
data structures and algorithms with object oriented design patterns in c
david attenborough sats type comprehension by
dermatology multiple choice questions and answers

Interfacing 16x2 Lcd With 8051 Microcontroller Lcd Module :

the professional receptionist training course udemy - Jul 11 2023
web the first contact and first impressions of the company starts at the front gate security main entrance with customers clients and external people while visiting your company receptionists attend to callers visitors employees telephone calls and handle a variety of administration and maintenance tasks
8 front desk training hiring templates connectsus hr - Mar 07 2023
web jun 14 2021 1 hire the right front desk receptionist in my experience front desk positions are difficult positions to fill they take time and require due diligence to do it right don t settle keep looking until you find the right person for your front office job start with a clear position description used to create your job front desk posting

effective receptionist and front desk manager training - Mar 27 2022
web mar 17 2023 this effective receptionist and front desk manager training course aims to fulfil the following objectives develop face of the office the receptionist for the clients ensure distinguished first impression on the client either visiting the premises of the business or making phone calls
10 front office training topics edapp microlearning - Feb 06 2023
web first impressions last which is why we ve put together a list of the most important front office training topics to ensure that your customer facing department sets the right tone from the moment the customer walks in the door you will also find some training topics that will help your front office employees master the know how of
front desk and receptionist skills training - Sep 13 2023
web this course for receptionists and other staff at the front desk will give clear guidelines for presenting a professional image provide tips related to improving productivity suggest tactics for communicating with ease over the telephone and in person offer guidance for dealing with surprises that occur at the front desk
what is a desk receptionist a career guide coursera - Oct 02 2022
web jun 16 2023 a desk receptionist works at the front desk of an office business or medical practice you would typically be the first person customers or clients see as they enter the building or office in addition to greeting customers and clients you might handle phone calls answer emails and perform other administrative tasks
front desk and receptionist skills course business training - Apr 27 2022
web prepares your front desk staff to look and act professionally and at brand during this interactive training workshop course such course program class for delivery onsite 800 934 9410
receptionist and frontdesk training workshop pdf body - Aug 12 2023
web our the exceptional receptionist training program will improve the way your front desk personnel interacts and communicates with your customers clients or patients these time tested skills and techniques are proven to lower customer turnover dissatisfaction frustrations and reduced stress on your other team members
receptionistand frontdesktrainingworkshop pdf slideshare - Dec 04 2022
web mar 2 2013 this course is specifically designed to address the needs of those who sit at the front desk and who unwillingly are the first ambassadors to their organization our receptionist and front desk training program will improve the way your receptionist and front desk personnel interact and communicate with your customers or clients
receptionist and front desk training workshop first copy - Jul 31 2022
web apr 2 2023 title receptionist and front desk training workshop first copy created date 4 2 2023 12 53 16 am
receptionist and front desk training workshop first carl - Jun 29 2022

web merely said the receptionist and front desk training workshop first is universally compatible with any devices to read saunders essentials of medical assisting e book diane m klieger 2013 08 07 saunders essentials of medical assisting 2nd edition is designed to give you just the right amount of the

ppt receptionist training how to train your front desk to - Jan 25 2022

web aug 17 2018 by investing in receptionist training either through a formal dental office receptionist course or a diy strategy as outlined above you ll empower your front desk team to deliver the best possible first impression and ensure that the patient experience is always second to none

front desk receptionist online training for hospitality - Nov 03 2022

web apr 2 2021 magnify school 24 1k subscribers 7 9k views 2 years ago hospitality tips and tricks access complete hotel front desk receptionist training on this link magnifyingclass com all c

hotel front desk training 8 need to know tips cvent blog - Apr 08 2023

web oct 29 2020 excel at hotel front desk training maximize your virtual training sessions by keeping attendees engaged through breakout sessions live polling and q as at the end or review the importance of professionalism in hospitality to inspire your hotel front desk training program and remember training isn t a one time event it s a method that

effective skills for receptionist and front desk officers virtual - May 29 2022

web may 16 2022 personal assistants front desk officers secretaries and others who perform related duties in the workplace training methodology the training methodology combines lectures discussions group exercises and illustrations participants will gain both theoretical and practical knowledge of the topics

the outstanding receptionist administrative assistant training - Feb 23 2022

web this program is packed with the tools and techniques receptionists need to face challenges confidently tackle growing responsibilities and maintain composure amidst chaos you will learn to manage your time better deal with all types of people handle conflict with tact and poise and make a positive and polished first impression

skill development for receptionists and other front desk staff - Sep 01 2022

web sep 29 2022 join us on 22 october 2022 for msc consultancy virtual workshop via zoom skill development for receptionists and other front desk workers receptionists front desk staff and other gatekeepers are the

managing the front desk live online seminar pryor learning - Jan 05 2023

web this front desk training seminar can help you and your organization today in this one hour online receptionist training we ll talk about the challenging role of the receptionist position and how to keep your organization running from the front desk

frontline reception training i staff training - Jun 10 2023

web this course is designed to upskill receptionists and frontline personnel to be highly professional all frontline staff such as receptionists relief receptionists and telephony personnel will benefit from the practical information and approach to this all important position outdo your competitors and upskill today

administrative assistant front desk receptionist training - May 09 2023

web including trainings for remote and hybrid offices to popular programs like outlook teams and more pryor offers award winning administrative assistant front desk and receptionist training that closes skill gaps and maximizes core competencies

laetrile amygdalin or vitamin b17 cancer research uk - Jan 05 2023

web amygdalin is a plant substance found in raw nuts bitter almonds as well as apricot and cherry seeds plants like lima beans clover and sorghum also contain amygdalin some people call laetrile vitamin b17 although it isn t a vitamin why people with cancer use it laetrile has been used as an anti cancer agent since the 1800 s

what are bitter almonds leaftv - Feb 06 2023

web nov 21 2019 writer bio there are two types of almonds sweet and bitter sweet almonds are frequently used in cooking or can be eaten as a snack bitter almonds are frequently used for food flavorings or in oils sweet almonds grow on trees in australia south africa the mediterranean and the united states

what are bitter almonds and are they poisonous the spruce - Sep 13 2023

web aug 21 2023 bitter almonds are a variety of regular sweet almonds bitter almonds contain traces of prussic acid also known as hydrocyanic acid in its raw state hydrocyanic acid is a solution of hydrogen cyanide and water the byproduct is an organic version of the well known poison cyanide

how almonds went from deadly to delicious the salt npr - Apr 08 2023

web jun 13 2019 today many people have never even heard of poisonous almonds much less come across one in the wild though some folks still eat bitter almonds in small doses in tunisia for instance people

what are bitter almonds their benefits organic facts - Jul 11 2023

web feb 28 2020 bitter almonds are the seeds of certain trees belonging to prunus dulcis namely those that grow in the middle east and asia these seeds are often classified as nuts but they aren t true nuts and are actually a form of a drupe where the seed is enclosed in an outer hull and a hard shell

bitter almond health benefits side effects uses dose rxlist - Mar 07 2023

web bitter almond overview almonds are a familiar type of nut they can be sweet or bitter depending on the type of tree that produces uses effectiveness insufficient evidence to rate effectiveness for other conditions more evidence is needed to side effects do not use bitter almond

cyanide exposure decontamination treatment chemical - May 09 2023

web cyanide is sometimes described as having a bitter almond smell but does not always give off an odor and not everyone can detect this odor how people can be exposed to cyanide after a release of cyanide into the air people can be exposed through skin contact or eye contact or inhaling breathing in the cyanide gas

bitter almond uses side effects and more webmd - Aug 12 2023

web bitter almond prunus amygdalus var amara is a type of almond it contains a toxic chemical called amygdalin which is poisonous when consumed the amygdalin in bitter almond turns into

almond wikipedia - Oct 14 2023

web bitter almonds contain 42 times higher amounts of cyanide than the trace levels found in sweet almonds extract of bitter almond was once used medicinally but even in small doses effects are severe or lethal especially in children the cyanide must be removed before consumption

are almonds poisonous different varieties explained healthline - Jun 10 2023

web jul 3 2020 bitter almonds were the most common species grown until a few thousand years ago when a genetic mutation inhibited the almond tree s ability to make amygdalin the compound that gives bitter

manuel de mathématiques cm2 cahier d exercices by caroline - Jun 01 2022

web jun 25 2023 manuel de mathématiques cm2 cahier d exercices by caroline guény pour les métiers copian toupty jeu exercice math petits jeux et exercices de mathé matiques pour les enfants petits exercices en ligne pour apprendre à lire l heure en chiffres math cp ce1 ce2 cm1 cm2 exercices de maths sur champion maths cm1 manuel

maths cm2 exercices à au format pdf avec correction - Aug 15 2023

web les fiches d exercices sont au format pdf et imprimables gartuitement mise à jour du 30 04 2020 8 fiches d exercices ont été ajoutées sur le site il s agit de fiches d exercices sur les fractions en cm2 et plus précisément des fiches à imprimer qui permettent d appréhender les sommes de fractions les fractions sont représentées

exercices de maths en cm2 à télécharger et à imprimer en pdf - Feb 09 2023

web lecture et en mathématiques chez les enfants de la maternelle au cm2 les exercices de maths en cm2 munissez d une feuille blanche et de votre matériel de géométrie 10 cahiers coûtent 30 combien coûtent 30 35 40 ou 50 cahiers 6 utilise la technique qui te convient pour trouver les réponses

manuel de mathématiques cm2 cahier d exercices by caroline - Mar 30 2022

web jul 28 2023 cm2 cahier d exercices by caroline guény l enseignement des math matiques l cole primaire atelier mathmatique 2016 lala aime sa classe lire d couvrir le monde avec les math matiques gs lia erc gov ph 1 64

matha c matiques cm2 cahier d exercices pdf old vulkk - Jul 14 2023

web 4 matha c matiques cm2 cahier d exercices 2023 06 20 chapter of art history but before it vanished its extravagant cast

sat for peter hujar s camera and is now alive again in front of our eyes featured among others joe brainard william burroughs remy charlip edwin denby divine ray johnson fran

pdf manuel de matha c matiques cm2 cahier d exercices - Aug 03 2022

web manuel de matha c matiques cm2 cahier d exercices catalogue de livres d architecture arithma c tique astronomique matha c matique physique art militaire classic reprint jul 27 2022 pour comprendre les mathématiques ce2 nov 18 2021 histoire de l épidémiologie des facteurs de risque

mathématiques cm2 cours et programmes mymaxicours - Nov 06 2022

web pour aider votre enfant à progresser en mathématiques mymaxicours vous propose une solution complète clé en main et progressive pour réviser l ensemble du programme grâce à des leçons animées et des exercices interactifs récréatifs les 5 parties de ce cursus couvrent l ensemble du programme de l Éducation nationale en

cahier d exercices maths cm2 pdf prof - Oct 05 2022

web exercices de maths en cm2 à télécharger et à imprimer en pdf 27 août 2022 des exercices de maths en cm2 à télécharger et imprimer en pdf poir les élèves désireux de réviser leurs mathématiques en ligne au cm2 pdf bon en maths cm2 corrigés

manuel de matha c matiques ce2 cahier d exercices 2023 - Dec 27 2021

web manuel de matha c matiques ce2 cahier d exercices matha c matiques cm2 mar 28 2022 web mar 1 2023 matha c matiques cm2 is available in our book collection an online access to it is set as public so you can get it instantly our digital library hosts in multiple locations allowing you to get the most less latency

maths cm2 mon cahier pour la maison 300 exercices nathan - Mar 10 2023

web maths cm2 mon cahier pour la maison 300 exercices progressifs pour s entraîner et réussir je comprends tout de isabelle petit jean sylvie chavaroche sylvie ginet anne olivia messana feuilleter une collection pour un travail serein et efficace à la maison pour les enfants et les parents une mise en situation illustrée et

maths explicites cm2 cahier élève edition 2021 enseignants - May 12 2023

web jun 24 2021 le cahier propose une page d exercices pour chaque leçon du manuel chaque exercice correspond à une sous compétence précise et présente une structure récurrente une première question sous forme de qcm prépare l élève à l exercice elle lui permet de vérifier s il a retenu le savoir ou le savoir faire relatifs à la

manuel de mathématiques cm2 cahier d exercices by caroline - Dec 07 2022

web ce1 et de cp et un maître de cm2 vous trouverez donc ici de tout cahier d exercices de mathématiques pour les métiers copian toupty jeu exercice math petits jeux et exercices de mathé matiques pour les enfants petits exercices en ligne pour apprendre à lire l heure en chiffres math cp ce1 ce2 cm1 cm2 exercices de maths sur champion maths

mathématiques cm2 cahier d exercices by serge thévenet - Feb 26 2022
web lv1 cahier de l eleve pdf exercices cp pinterest cours et exercices maths amp tiques fiches d exercices fiches de cours et valuation et de exercice de math pour la 6me exercice a imprimer avec atelier mathmatique 2016 lala aime sa classe pour prendre les maths cm2 fichier lve ed 2017 lire d couvrir le monde avec les math matiques gs
mathématiques cm2 cahier d exercices by serge thévenet - Jun 13 2023
web mathématiques cm2 cahier d exercices by serge thévenet nicole pitot mathématiques cm2 cahier d exercices by serge thévenet nicole pitot cours et exercices maths amp tiques hallo freunde 3e lv1 cahier de l eleve pdf exercice de mathematiques en ligne exercice math 1ere s fr mathmatiques cm2 cahier de l lve
matha c matiques cm2 cahier d exercices pdf old vulkk - Jul 02 2022
web matha c matiques cm2 cahier d exercices 3 3 more immediate threat the skeleton king plots to claim the fifteen realms for his own with armies in disarray and the dead not staying down avry s healing powers are needed now more than ever torn between love and loyalty avry must choose her path carefully for the future of her world depends
matha c matiques cm2 cahier d exercices old vulkk - Sep 04 2022
web 4 matha c matiques cm2 cahier d exercices 2020 08 11 member of the forum of firms an organisation dedicated to consistent and high quality standards of financial reporting and auditing practices worldwide pkf com pkf international limited administers a family of legally independent firms and does not accept any responsibility or
manuel de matha c matiques cm2 cahier d exercices pdf - Jan 28 2022
web manuel de matha c matiques cm2 cahier d exercices downloaded from a be220 com by guest bianca slade the arch and the butterfly berrett koehler publishers un cahiers de 72 pages avec une quantite d exercices realiste et faisable sur l annee scolaire pour chaque capacite un rappel de cours suivi d exercices differencies des
cahier d exercices maths cm2 pdf pdf prof - Apr 30 2022
web dans ce recueil on trouvera 1 042 exercices pour la classe de 6e que les élèves doivent recopier sur leur cahier marion français maths histoire et géographie cm2 mm2 convertis les aires suivantes dans les unités d aires données recueilexercices
mathématiques cm2 cahier d exercices by serge thévenet - Apr 11 2023
web mathématiques cm2 cahier d exercices by serge thévenet nicole pitot fiches imprimables gratuites en mathématiques fiches et ressources gratuites Ã télécharger et Ã imprimer pour le soutien scolaire en mathématiques pour l école élémentaire pour le cp ce1 ce2 cm1 et cm2 fiches d
pdf manuel de matha c matiques cm2 cahier d exercices - Jan 08 2023
web manuel de matha c matiques cm2 cahier d exercices nouvelles annales de matha c matiques 1881 jun 18 2022 pour comprendre les matha c matiques ce2 fichier a c la ve ed 2017 jan 13 2022 nouvelle a0 00dition 2017 conforme aux nouveaux

programmes parution pra c vue pour le mois d avril 2017 a a une