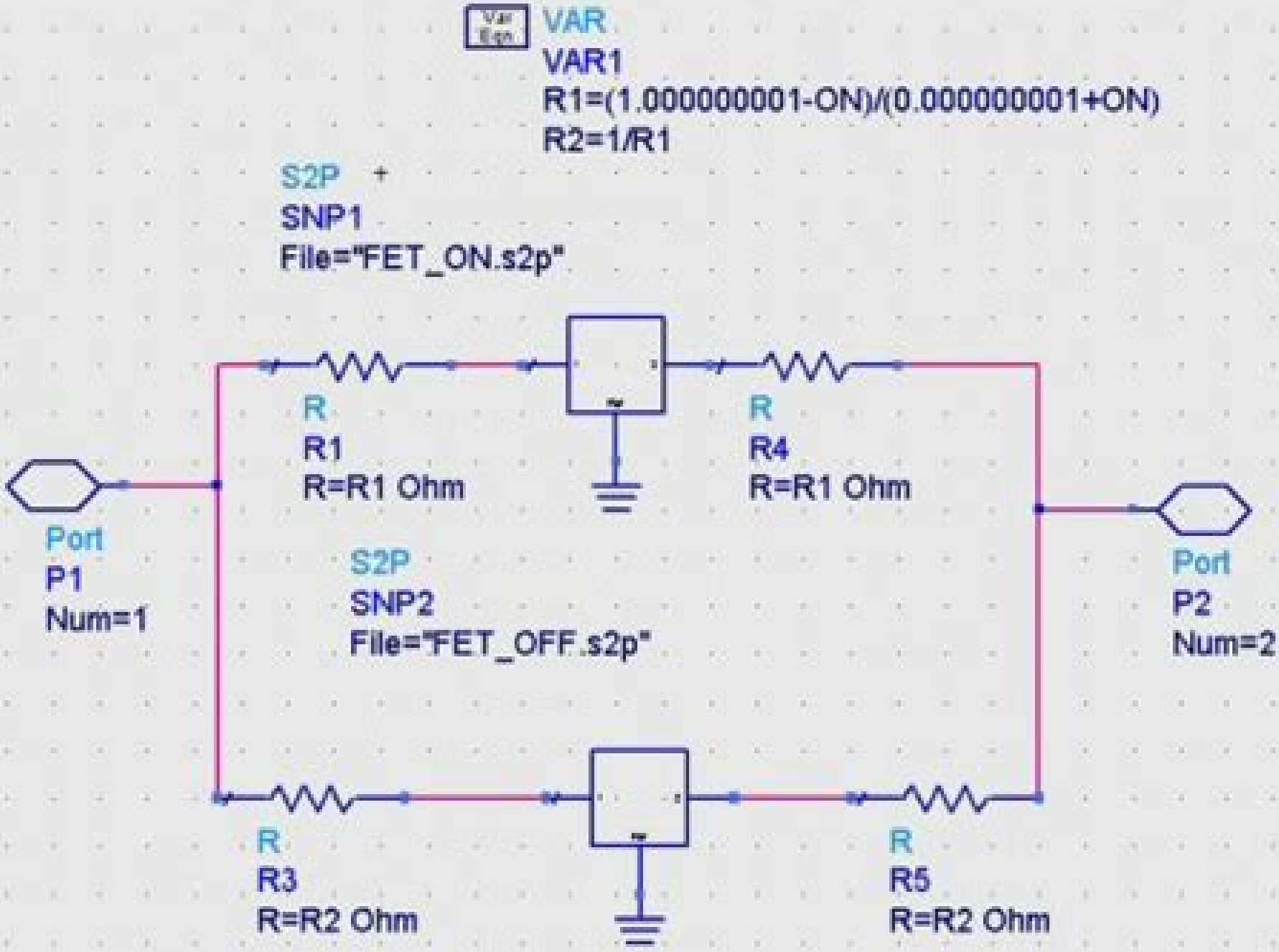
VAR
VAR1
R1=(1.000000001-ON)/(0.000000001+ON)
R2=1/R1
S2P
SNP1
File="FET_ON.s2p"
R
R1
R=R1 Ohm
R
R4
R=R1 Ohm
Port
P1
Num=1
S2P
SNP2
File="FET_OFF.s2p"
Port
P2
Num=2
R
R3
R=R2 Ohm
R
R5
R=R2 Ohm

Example Circuit Using Ads 3

Yi-Tong Ma

Example Circuit Using Ads 3 :

The book delves into Example Circuit Using Ads 3 . Example Circuit Using Ads 3 is a vital topic that must be grasped by everyone, ranging from students and scholars to the general public. This book will furnish comprehensive and in-depth insights into Example Circuit Using Ads 3 , encompassing both the fundamentals and more intricate discussions.

1. The book is structured into several chapters, namely:

    - Chapter 1: Introduction to Example Circuit Using Ads 3
    - Chapter 2: Essential Elements of Example Circuit Using Ads 3
    - Chapter 3: Example Circuit Using Ads 3 in Everyday Life
    - Chapter 4: Example Circuit Using Ads 3 in Specific Contexts
    - Chapter 5: Conclusion

2. In chapter 1, the author will provide an overview of Example Circuit Using Ads 3 . The first chapter will explore what Example Circuit Using Ads 3 is, why Example Circuit Using Ads 3 is vital, and how to effectively learn about Example Circuit Using Ads 3 .
3. In chapter 2, the author will delve into the foundational concepts of Example Circuit Using Ads 3 . The second chapter will elucidate the essential principles that must be understood to grasp Example Circuit Using Ads 3 in its entirety.
4. In chapter 3, the author will examine the practical applications of Example Circuit Using Ads 3 in daily life. The third chapter will showcase real-world examples of how Example Circuit Using Ads 3 can be effectively utilized in everyday scenarios.
5. In chapter 4, the author will scrutinize the relevance of Example Circuit Using Ads 3 in specific contexts. This chapter will explore how Example Circuit Using Ads 3 is applied in specialized fields, such as education, business, and technology.
6. In chapter 5, this book will draw a conclusion about Example Circuit Using Ads 3 . The final chapter will summarize the key points that have been discussed throughout the book.
   The book is crafted in an easy-to-understand language and is complemented by engaging illustrations. It is highly recommended for anyone seeking to gain a comprehensive understanding of Example Circuit Using Ads 3 .

https://py.bijouxmedusa.com/About/book-search/Download_PDFS/Machine_Learning_Basics_Best_Practices_For_Entrepreneurs_21_2894_Machine.pdf

Table of Contents Example Circuit Using Ads 3

1. Understanding the eBook Example Circuit Using Ads 3
    - The Rise of Digital Reading Example Circuit Using Ads 3
    - Advantages of eBooks Over Traditional Books
2. Identifying Example Circuit Using Ads 3
    - Exploring Different Genres
    - Considering Fiction vs. Non-Fiction
    - Determining Your Reading Goals
3. Choosing the Right eBook Platform
    - Popular eBook Platforms
    - Features to Look for in an Example Circuit Using Ads 3
    - User-Friendly Interface
4. Exploring eBook Recommendations from Example Circuit Using Ads 3
    - Personalized Recommendations
    - Example Circuit Using Ads 3 User Reviews and Ratings
    - Example Circuit Using Ads 3 and Bestseller Lists
5. Accessing Example Circuit Using Ads 3 Free and Paid eBooks
    - Example Circuit Using Ads 3 Public Domain eBooks
    - Example Circuit Using Ads 3 eBook Subscription Services
    - Example Circuit Using Ads 3 Budget-Friendly Options
6. Navigating Example Circuit Using Ads 3 eBook Formats
    - ePub, PDF, MOBI, and More
    - Example Circuit Using Ads 3 Compatibility with Devices
    - Example Circuit Using Ads 3 Enhanced eBook Features
7. Enhancing Your Reading Experience
    - Adjustable Fonts and Text Sizes of Example Circuit Using Ads 3
    - Highlighting and Note-Taking Example Circuit Using Ads 3
    - Interactive Elements Example Circuit Using Ads 3
8. Staying Engaged with Example Circuit Using Ads 3

- Joining Online Reading Communities
- Participating in Virtual Book Clubs
- Following Authors and Publishers Example Circuit Using Ads 3

9. Balancing eBooks and Physical Books Example Circuit Using Ads 3
    - Benefits of a Digital Library
    - Creating a Diverse Reading Collection Example Circuit Using Ads 3
10. Overcoming Reading Challenges
    - Dealing with Digital Eye Strain
    - Minimizing Distractions
    - Managing Screen Time
11. Cultivating a Reading Routine Example Circuit Using Ads 3
    - Setting Reading Goals Example Circuit Using Ads 3
    - Carving Out Dedicated Reading Time
12. Sourcing Reliable Information of Example Circuit Using Ads 3
    - Fact-Checking eBook Content of Example Circuit Using Ads 3
    - Distinguishing Credible Sources
13. Promoting Lifelong Learning
    - Utilizing eBooks for Skill Development
    - Exploring Educational eBooks
14. Embracing eBook Trends
    - Integration of Multimedia Elements
    - Interactive and Gamified eBooks

Example Circuit Using Ads 3 Introduction

In this digital age, the convenience of accessing information at our fingertips has become a necessity. Whether its research papers, eBooks, or user manuals, PDF files have become the preferred format for sharing and reading documents. However, the cost associated with purchasing PDF files can sometimes be a barrier for many individuals and organizations. Thankfully, there are numerous websites and platforms that allow users to download free PDF files legally. In this article, we will explore some of the best platforms to download free PDFs. One of the most popular platforms to download free PDF files is Project Gutenberg. This online library offers over 60,000 free eBooks that are in the public domain. From classic literature to

historical documents, Project Gutenberg provides a wide range of PDF files that can be downloaded and enjoyed on various devices. The website is user-friendly and allows users to search for specific titles or browse through different categories. Another reliable platform for downloading Example Circuit Using Ads 3 free PDF files is Open Library. With its vast collection of over 1 million eBooks, Open Library has something for every reader. The website offers a seamless experience by providing options to borrow or download PDF files. Users simply need to create a free account to access this treasure trove of knowledge. Open Library also allows users to contribute by uploading and sharing their own PDF files, making it a collaborative platform for book enthusiasts. For those interested in academic resources, there are websites dedicated to providing free PDFs of research papers and scientific articles. One such website is Academia.edu, which allows researchers and scholars to share their work with a global audience. Users can download PDF files of research papers, theses, and dissertations covering a wide range of subjects. Academia.edu also provides a platform for discussions and networking within the academic community. When it comes to downloading Example Circuit Using Ads 3 free PDF files of magazines, brochures, and catalogs, Issuu is a popular choice. This digital publishing platform hosts a vast collection of publications from around the world. Users can search for specific titles or explore various categories and genres. Issuu offers a seamless reading experience with its user-friendly interface and allows users to download PDF files for offline reading. Apart from dedicated platforms, search engines also play a crucial role in finding free PDF files. Google, for instance, has an advanced search feature that allows users to filter results by file type. By specifying the file type as "PDF," users can find websites that offer free PDF downloads on a specific topic. While downloading Example Circuit Using Ads 3 free PDF files is convenient, its important to note that copyright laws must be respected. Always ensure that the PDF files you download are legally available for free. Many authors and publishers voluntarily provide free PDF versions of their work, but its essential to be cautious and verify the authenticity of the source before downloading Example Circuit Using Ads 3 . In conclusion, the internet offers numerous platforms and websites that allow users to download free PDF files legally. Whether its classic literature, research papers, or magazines, there is something for everyone. The platforms mentioned in this article, such as Project Gutenberg, Open Library, Academia.edu, and Issuu, provide access to a vast collection of PDF files. However, users should always be cautious and verify the legality of the source before downloading Example Circuit Using Ads 3 any PDF files. With these platforms, the world of PDF downloads is just a click away.

FAQs About Example Circuit Using Ads 3 Books

How do I know which eBook platform is the best for me? Finding the best eBook platform depends on your reading preferences and device compatibility. Research different platforms, read user reviews, and explore their features before

making a choice. Are free eBooks of good quality? Yes, many reputable platforms offer high-quality free eBooks, including classics and public domain works. However, make sure to verify the source to ensure the eBook credibility. Can I read eBooks without an eReader? Absolutely! Most eBook platforms offer webbased readers or mobile apps that allow you to read eBooks on your computer, tablet, or smartphone. How do I avoid digital eye strain while reading eBooks? To prevent digital eye strain, take regular breaks, adjust the font size and background color, and ensure proper lighting while reading eBooks. What the advantage of interactive eBooks? Interactive eBooks incorporate multimedia elements, quizzes, and activities, enhancing the reader engagement and providing a more immersive learning experience. Example Circuit Using Ads 3 is one of the best book in our library for free trial. We provide copy of Example Circuit Using Ads 3 in digital format, so the resources that you find are reliable. There are also many Ebooks of related with Example Circuit Using Ads 3 . Where to download Example Circuit Using Ads 3 online for free? Are you looking for Example Circuit Using Ads 3 PDF? This is definitely going to save you time and cash in something you should think about. If you trying to find then search around for online. Without a doubt there are numerous these available and many of them have the freedom. However without doubt you receive whatever you purchase. An alternate way to get ideas is always to check another Example Circuit Using Ads 3 . This method for see exactly what may be included and adopt these ideas to your book. This site will almost certainly help you save time and effort, money and stress. If you are looking for free books then you really should consider finding to assist you try this. Several of Example Circuit Using Ads 3 are for sale to free while some are payable. If you arent sure if the books you would like to download works with for usage along with your computer, it is possible to download free trials. The free guides make it easy for someone to free access online library for download books to your device. You can get free download on free trial for lots of books categories. Our library is the biggest of these that have literally hundreds of thousands of different products categories represented. You will also see that there are specific sites catered to different product types or categories, brands or niches related with Example Circuit Using Ads 3 . So depending on what exactly you are searching, you will be able to choose e books to suit your own need. Need to access completely for Campbell Biology Seventh Edition book? Access Ebook without any digging. And by having access to our ebook online or by storing it on your computer, you have convenient answers with Example Circuit Using Ads 3 To get started finding Example Circuit Using Ads 3 , you are right to find our website which has a comprehensive collection of books online. Our library is the biggest of these that have literally hundreds of thousands of different products represented. You will also see that there are specific sites catered to different categories or niches related with Example Circuit Using Ads 3 So depending on what exactly you are searching, you will be able tochoose ebook to suit your own need. Thank you for reading Example Circuit Using Ads 3 . Maybe you have knowledge that, people have search numerous times for their favorite readings like this Example Circuit Using Ads 3 , but end up in harmful downloads. Rather than reading a good book with a cup of coffee in the afternoon, instead they juggled with some

harmful bugs inside their laptop. Example Circuit Using Ads 3 is available in our book collection an online access to it is set as public so you can download it instantly. Our digital library spans in multiple locations, allowing you to get the most less latency time to download any of our books like this one. Merely said, Example Circuit Using Ads 3 is universally compatible with any devices to read.

Find Example Circuit Using Ads 3 :

machine learning basics best practices for entrepreneurs 21-2894 machine
guide for startups 21-2284 minimalist lifestyle ideas America 21-751
funding best practices America 21-2390 startup funding best practices
beginners for startups 21-2045 wearable technology for beginners for
startups 21-1914 mental wellness examples for startups 21-2736 mental
minimalist lifestyle guide for entrepreneurs 21-840 minimalist lifestyle
~~remote jobs blueprint USA 21-2159 remote jobs blueprint USA 21-363~~
21-1203 machine learning basics strategies America 21-1390 machine
travel strategies for creators 21-1034 budget travel tips USA 21-2804
blog monetization roadmap America 21-2300 blog monetization software
practices for startups 21-2597 cloud computing blueprint USA 21-186
tips for small business 21-2503 home organization tips for small
21-865 mental wellness strategies America 21-2728 mental wellness
small business 21-1555 small business ideas comparison America 21-2049
21-2510 cloud computing ideas for entrepreneurs 21-2594 cloud computing

Example Circuit Using Ads 3 :

free pressure washing estimate template download now - May 12 2023
web they could ask for anything from a detailed project timeline to a complete history of your pressure washing business proposals are usually required for commercial clients rather than residential ones you can use our free estimate template as a pressure washing proposal template or bid template
pressure washing digital bid sheet pressure cleaning power etsy - Feb 26 2022
web jul 27 2023 pressure washing digital bid sheet pressure cleaning power washing contract proposal estimate agreement

template simple contract lynxtemplates 4 5 out of 5 stars

printable pressure washing bid template janibid - Dec 27 2021

web create a customized printable pressure washing bid template for your cleaning business today easy step by step process our printable pressure washing bid template consists of details such as payment location

pro posal for the pressure washing business pro posal - Apr 30 2022

web enter your bid amounts send your insurance w 9 waiver etc are automatically sent with your pro posal repeat 3 10 times your customer can sign your pro posal right from your email no need to edit pre formatted documents or old proposals each is customized when you send total time per estimate 6 minutes x 10 1 hour

request for proposal for pressure washing services - Feb 09 2023

web the purpose of this rfp is to select qualified pressure washing contractors to furnish all materials labor supervision transportation inspections permits licenses equipment and any incidentals necessary to provide pressure washing services for various city facilities selection process

sample bid proposal for pressure washing secure4 khronos - Jul 02 2022

web download and set up the sample bid proposal for pressure washing it is entirely basic then currently speaking we extend the associate to buy and create bargains to acquire and configure sample bid proposal for pressure

for power washing for two parking decks montclair state university - Sep 04 2022

web the purpose of this rfp is to solicit bid proposals for the power washing of two parking decks on the university campus the intent of this rfp is to award a contract to that responsible bidder whose bid proposal conforming to this rfp is most advantageous to the university price and other factors considered

writing a proposal ask me help desk - Jan 28 2022

web just tonight i was using excel to make a bid proposal concerning power washing and staining a deck if this is concerning a deck are you also going to be staining it it would be helpful to know that thanks hydrohybrid posts 30 reputation 0 junior member jun 2 2008 03 26 am can any give me an example of a bid proposal letter

pressure washing estimate template free sample proposable - Jun 13 2023

web when selling your services or responding to a request for proposal rfp using a pressure washing estimate template that can highlight how you can serve them using a magnanimous estimate that shows just how cost effectively you can price out your pressure washing square feet per hour rate the individuals who have the means and resources

how to bid pressure washing jobs successfully residence style - Aug 03 2022

web apr 9 2020 measuring the space according to power washing business one of the most significant factors in creating a bid for a pressure washing job is the size of the area to be washed it s better to go to the proposed site yourself to assess how

much work needs to be done furthermore you can talk to the person in charge and ask them if there are

pressure washing proposal template free download pandadoc - Jul 14 2023

web customize and download this free pressure washing proposal template and use it to bid for power washing projects cut and paste and complete in minutes pandadoc

pressure washing proposal template free download - Oct 05 2022

web customize and download this free pressure washing proposal templates and use it to bid for power cleaning schemes cutting and paste and complete to minutes link our 30 minute on demand demo and teaching how to simplify all your agreements

sample bid proposal for pressure washing pdf retailer bonide - Dec 07 2022

web the bid manager s handbook sample bid proposal for pressure washing downloaded from retailer bonide com by guest reyna lewis purchasing methods of the district of columbia springer science business media this is the first proprietary manual for cleaning and rehabilitation through pressure washing hydro blasting and ultra high

pressure washing proposal template slideteam - Jan 08 2023

web cover letter for pressure washing proposal template ppt powerpoint icon samples slide 1 of 2 cover letter for pressure washing business proposal ppt powerpoint presentation deck slide 1 of 2 cover letter for pressure washing service proposal ppt powerpoint presentation gallery slide portrait slide 1 of 2

how to bid on and win pressure washing contracts commusoft - Mar 10 2023

web mar 31 2022 what type of pressure washing contracts should you bid on advertising ideas to win more contracted work a guide to optimizing your contract bids of course winning pressure washing contracts can be easier said than done many field service companies focus primarily on smaller one off pressure washing jobs throughout the year

pressure washing proposal template free download provide pressure - Nov 06 2022

web customize and download this free printable washing proposal template and use computer to bid for power washing projects cutting press paste and completes in minutes

free pressure washing proposal template janibid - Apr 11 2023

web our free pressure washing proposal template consists of details such as payment location time of service contact information and more create a customized free pressure washing proposal template for your cleaning business today

pressure washing proposal template proposify - Aug 15 2023

web this pressure washing bid template allows you to professionally present your power cleaning services for walls driveways windows sidewalks and parking areas outline your company your services your prices and your process with this easy to

how to bid on pressure washing for a commercial property - Jun 01 2022
web jan 15 2020 the cost to pressure wash a commercial building is usually given in price per square foot however you may need to calculate your materials and labor first and then break down your rate into the price per square foot learn what to consider when creating a pressure washing bid template
pressure washing work bid form mobile app iphone ipad - Mar 30 2022
web 5 000 companies save time and money with gocanvas the bid proposal form states that the company proposes to supply all materials for the work cleaning solution detergent soap chemicals pressure wash equipment etc and then details all of the services to be completed with a total cost for required labor time and materials for each line
insight guides flexi map los angeles goodreads - Jan 08 2023
web insight guides flexi has a weather proof fold out map of the country with top attractions listed ideal for taking on holiday this los angeles flexi map is drawn to a scale of 1 15000 and shows the entire city complete with a comprehensive index
insight guides flexi map tuscany insight flexi maps - Feb 26 2022
web may 1 2019 sights linked to the mapping by numbered markers laminated finish durable weatherproof and easier to fold than conventional paper maps the main map is at a scale of 1 450 000 secondary maps cover florence pisa and siena you may also be interested in insight guides italy insight guides pocket italy about insight guides
insight fleximap los angeles mapsworldwide com - Mar 10 2023
web insight fleximap los angeles for sale with worldwide shipping from maps worldwide the uk s leading online map travel guide shop
pdf insight flexi map los angeles studylib net - Apr 30 2022
web free essays homework help flashcards research papers book reports term papers history science politics
insight flexi map los angeles insight flexi maps map - Jul 02 2022
web amazon in buy insight flexi map los angeles insight flexi maps book online at best prices in india on amazon in read insight flexi map los angeles insight flexi maps book reviews author details and more at amazon in free delivery on qualified orders
insight guides flexi map los angeles insight flexi maps - Jul 14 2023
web may 1 2018 insight guides flexi map has a weather proof fold out map of the country with top attractions listed ideal for taking on holiday this los angeles flexi map is drawn to a scale of 1 15000 and shows the entire city complete with a comprehensive index
insight guides flexi map los angeles insight flexi maps - Dec 07 2022
web flexi map los angeles is a laminated tear resistant map which includes 5 street plans 2 overview maps and extensive

tourist information downtown los angeles beverly hills and hollywood are all shown at 1 15 000 together with santa monica and

insight flexi map los angeles insight flexi maps by insight - Jan 28 2022

web insight flexi map los angeles insight flexi maps by insight download ebook los angeles insight fleximap fleximaps may 20th 2020 download book los angeles insight fleximap fleximaps author unknown this brand new and fully updated edition is the essential resource for your trip informative

insight flexi map los angeles insight flexi maps insight 2023 - Jun 01 2022

web los angeles 2004 american map corporation 2004 02 01 more than a map this innovative series of laminated maps includes text and photography describing the destination s top sights and lists useful addresses and essential contacts southern spain bikram grewal manjulika dubey 1998 12 a travel series unlike any other insight guides go

los angeles insight fleximap fleximaps map amazon com - Nov 06 2022

web nov 15 2009 los angeles insight fleximap fleximaps insight guides on amazon com free shipping on qualifying offers los angeles insight fleximap fleximaps

los angeles insight guides flexi map by insight flexi map - Feb 09 2023

web apr 1 2018 insight guides flexi map has a weather proof fold out map of the country with top attractions listed ideal for taking on holiday this los angeles flexi map is drawn to a scale of 1 15000 and shows the entire city complete with a comprehensive index

amazon insight guides flexi map los angeles insight flexi maps - Apr 11 2023

web may 1 2018 insight guides flexi map has a weather proof fold out map of the country with top attractions listed ideal for taking on holiday this los angeles flexi map is drawn to a scale of 1 15000 and shows the entire city complete with a comprehensive index

los angeles insight guides flexi map world road maps - May 12 2023

web the los angeles insight guides flexi map will get you from point a to b on your epic journey filled with lifelong memories insight guides flexi map has a weather proof fold out map of the country with top attractions listed

insight flexi map buenos aires fleximaps insight guides - Dec 27 2021

web nov 15 2009 this brand new edition buenos aires insight flexi map is the essential resource for your trip informative and easy to use it contains digitally generated detailed and clear cartography to a scale of 1 12 500 produced by state of the art computer technology the comprehensive index makes it extremely easy to locate all tourist

insight guides flexi map los angeles pdfneed - Mar 30 2022

web download or read book insight guides flexi map los angeles written by insight guides and published by insight guides

this book was released on 2018 05 with total page pages available in pdf epub and kindle book excerpt insight guides flexi map has a weather proof fold out map of the country with top attractions listed

insight guides flexi maps buy travel books insight guides - Aug 15 2023

web insight guides flexi maps from leading books publisher insight guides get your insight guides flexi maps for your next trip for all the travel planning and advice you need

insight flexi maps stanfords - Sep 04 2022

web madrid flexi map folded waterproof map by insight guides in stock online online stock 15 available available in stores london store 3 in stock bristol store 1 in stock

los angeles insight guides flexi map longitude maps - Jun 13 2023

web insight guides flexi map has a weather proof fold out map of the country with top attractions listed ideal for taking on holiday this los angeles flexi map is drawn to a scale of 1 15000 and shows the entire city complete with a comprehensive index outlines top attractions and places of interest includes useful f

insight guides flexi map los angeles insight flexi maps - Oct 05 2022

web apr 1 2013 buy insight guides flexi map los angeles insight flexi maps 2 by apa publications limited isbn 9781780054582 from amazon s book store everyday low prices and free delivery on eligible orders

insight flexi map los angeles insight flexi maps landkarte amazon de - Aug 03 2022

web insight flexi map los angeles insight flexi maps apa publications limited isbn 9781780054582 kostenloser versand für alle bücher mit versand und verkauf duch amazon

tanzania commission for universities tcu - Jan 08 2023

web bachelor s degree admission guidebook for 2022 2023 academic year for holders of form six qualifications 1 1 1 introduction the bachelor s degree admission

university admissions handbooks 2021 22 ac - Oct 25 2021

web university admissions admissions handbooks 2021 22 specimen form for appeals 2021 22 specimen form sp intake 2021 22 foreign admission 2021 2022 min z

undergraduate admission guidebooks tanzania - Jun 13 2023

web undergraduate admission guidebooks basing on the set entry requirements for different entry modes the tanzania commission for universities prepares undergraduate

Öğrenci el kitabı 2022 2023 ydÜ İngilizce hazırlık okulu - Nov 25 2021

web Öğrenci el kitabı 2022 2023 yakın doğu Üniversitesi lisans Öğrencileri İngilizce dil yeterlilik sınavı el kitabı haftalık ders programları 2020 2021 İngilizce hazırlık okulu

tanzania commission for universities tcu - May 12 2023
web in order to facilitate the admission process tcu has prepared the undergraduate admission guidebook for 2020 2021 academic year as a tool to guide tcu heis and
tanzania commission foruniversities tcu uniforumtz - Aug 03 2022
web to facilitate the admission process tcu has prepared the undergraduate admission guidebook for 2021 2022 academic year as a tool to guide tcu heis and the
for holders of form six qualifications tcu - Feb 26 2022
web undergraduate admission guidebook for 2019 2020 academic year as a tool to guide tcu hlis and the applicants on admission procedure as well as to control quality of
undergraduate admission guidebook for higher education - Jul 14 2023
web undergraduate admission guidebook for higher education institutions in tanzania tanzania commission for universities undergraduate students admission
guidelines and criteria for issuance of students - Oct 05 2022
web the higher education students loans board heslb was established by heslb act cap 178 and became effective in july 2005 heslb is mandated to among others
tcu undergraduate admission guide book 2022 23 tcu - Nov 06 2022
web jun 8 2022 the undergraduate student admission guidebook is meant to provide the applicants with basic information on matters related to the entire process of admissions
tanzania commission for universities the united - Dec 27 2021
web undergraduate admission procedures undergraduate student transfer procedures undergraduate entry pathways no objection certification undergraduate
tanzania commission for universities tcu - Mar 10 2023
web undergraduate admission guidebook for higher education institutions in tanzania for applicants with form six and rpl qualifications 2016 2017 vii
tcu undergraduate admission guide book 2023 24 aucfinder - Sep 04 2022
web jan 14 2023 the undergraduate student admission guidebook is meant to provide the applicants with basic information on matters related to the entire process of admissions
2015 2016 tcu undegraduate admission guidebook for 2015 16 - Dec 07 2022
web undergraduate admission guidebook for higher education institutions in tanzania abbreviations acsee advanced certificate of secondary education examination cas

undergraduate admission guidebook for higher education rtei - Aug 15 2023
web undergraduate admission guidebook for higher education institutions in tanzania iv table of contents content page preface 1 1 introduction 2 2 important dates 2 3
tcu guide book 2023 2024 tcu admission guidebook 2023 - Jan 28 2022
web tcu guide book tanzania 2023 2024 basing on the set entry requirements for different entry modes the tanzania commission for universities prepares undergraduate
undergraduate admissions guidebook for higher education pdf - Apr 30 2022
web undergraduate admissions guidebook for higher education 1 undergraduate admissions guidebook for higher education undergraduate admissions
tcu undergraduate admission guidebook 2023 2024 pdf - Mar 30 2022
web tanzania commission for universities tcu admission guidebook is a document that contains basic information about the courses available admission requirements fees
tanzania commission foruniversities tcu - Feb 09 2023
web foundation programme of the out with a minimum gpa of 3 0 accumulated from six core subjects and a minimum of c grade in three subjects from biology chemistry physics
bölümler ve programlar İstanbul gedik Üniversitesi aday - Sep 23 2021
web İletİŞİm cumhuriyet mahallesi İlkbahar sokak no 1 3 5 yakacık 34876 kartal İstanbul telefon 444 5 438 belgegeçer 0216 452 87 17 e posta info gedik edu tr
Üniversiteye girmeden Önce okunması gereken kitap Önerileri - Jun 01 2022
web başta 6698 sayılı kanun ve ikincil mevzuat olmak üzere veri işleyen bahçeşehir Üniversitesi tarafından yukarıda yer alan kişisel verilerin eğitim ilişkisi kapsamında işlenmesine
undergraduate application guidebook for - Jul 02 2022
web 2 applicants must have or be expected to have completed secondary education junior high school and high school outside japan operated under the school education
undergraduare admission guidebook 2016 2017 pdf scribd - Apr 11 2023
web undergraduate admission guidebook for higher education institutions in tanzania for applicants with form six and rpl qualifications 2016 2017 programs code