UK UNDERFLOOR HEATING

Wiring using a Wiring Centre (Multi Zone)

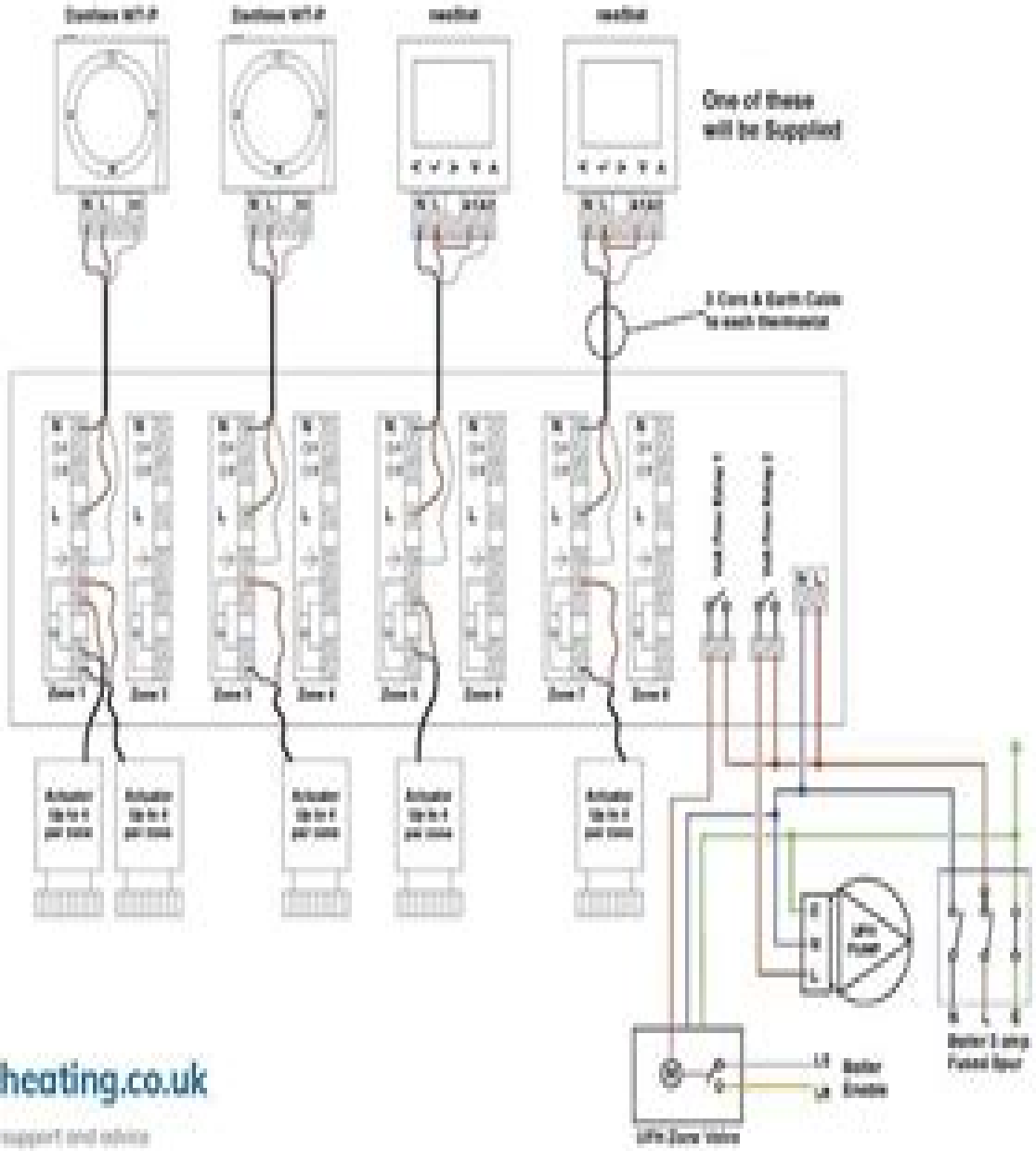

visit

www.ukunderfloorheating.co.uk

for more information, products, support and advice

Connection Example Danfoss

ML Morrison

Connection Example Danfoss:

Adopting the Tune of Expression: An Psychological Symphony within **Connection Example Danfoss**

In a world taken by screens and the ceaseless chatter of quick interaction, the melodic beauty and psychological symphony created by the prepared word frequently disappear into the back ground, eclipsed by the constant noise and disruptions that permeate our lives. Nevertheless, set within the pages of **Connection Example Danfoss** an enchanting literary treasure brimming with fresh feelings, lies an immersive symphony waiting to be embraced. Constructed by a wonderful composer of language, that interesting masterpiece conducts visitors on an emotional journey, skillfully unraveling the hidden melodies and profound influence resonating within each cautiously crafted phrase. Within the depths of this moving review, we will discover the book is central harmonies, analyze their enthralling writing type, and surrender ourselves to the profound resonance that echoes in the depths of readers souls.

https://py.bijouxmedusa.com/data/Resources/Download_PDFS/For_Creators_58_94_Digital_Marketing_Trends_America_58_1768_Digital.pdf

Table of Contents Connection Example Danfoss

1. Understanding the eBook Connection Example Danfoss
    - The Rise of Digital Reading Connection Example Danfoss
    - Advantages of eBooks Over Traditional Books
2. Identifying Connection Example Danfoss
    - Exploring Different Genres
    - Considering Fiction vs. Non-Fiction
    - Determining Your Reading Goals
3. Choosing the Right eBook Platform
    - Popular eBook Platforms
    - Features to Look for in an Connection Example Danfoss
    - User-Friendly Interface
4. Exploring eBook Recommendations from Connection Example Danfoss

    - Personalized Recommendations
    - Connection Example Danfoss User Reviews and Ratings
    - Connection Example Danfoss and Bestseller Lists
5. Accessing Connection Example Danfoss Free and Paid eBooks
    - Connection Example Danfoss Public Domain eBooks
    - Connection Example Danfoss eBook Subscription Services
    - Connection Example Danfoss Budget-Friendly Options
6. Navigating Connection Example Danfoss eBook Formats
    - ePub, PDF, MOBI, and More
    - Connection Example Danfoss Compatibility with Devices
    - Connection Example Danfoss Enhanced eBook Features
7. Enhancing Your Reading Experience
    - Adjustable Fonts and Text Sizes of Connection Example Danfoss
    - Highlighting and Note-Taking Connection Example Danfoss
    - Interactive Elements Connection Example Danfoss
8. Staying Engaged with Connection Example Danfoss
    - Joining Online Reading Communities
    - Participating in Virtual Book Clubs
    - Following Authors and Publishers Connection Example Danfoss
9. Balancing eBooks and Physical Books Connection Example Danfoss
    - Benefits of a Digital Library
    - Creating a Diverse Reading Collection Connection Example Danfoss
10. Overcoming Reading Challenges
    - Dealing with Digital Eye Strain
    - Minimizing Distractions
    - Managing Screen Time
11. Cultivating a Reading Routine Connection Example Danfoss
    - Setting Reading Goals Connection Example Danfoss
    - Carving Out Dedicated Reading Time
12. Sourcing Reliable Information of Connection Example Danfoss

- Fact-Checking eBook Content of Connection Example Danfoss
- Distinguishing Credible Sources

13. Promoting Lifelong Learning
    - Utilizing eBooks for Skill Development
    - Exploring Educational eBooks
14. Embracing eBook Trends
    - Integration of Multimedia Elements
    - Interactive and Gamified eBooks

Connection Example Danfoss Introduction

Connection Example Danfoss Offers over 60,000 free eBooks, including many classics that are in the public domain. Open Library: Provides access to over 1 million free eBooks, including classic literature and contemporary works. Connection Example Danfoss Offers a vast collection of books, some of which are available for free as PDF downloads, particularly older books in the public domain. Connection Example Danfoss : This website hosts a vast collection of scientific articles, books, and textbooks. While it operates in a legal gray area due to copyright issues, its a popular resource for finding various publications. Internet Archive for Connection Example Danfoss : Has an extensive collection of digital content, including books, articles, videos, and more. It has a massive library of free downloadable books. Free-eBooks Connection Example Danfoss Offers a diverse range of free eBooks across various genres. Connection Example Danfoss Focuses mainly on educational books, textbooks, and business books. It offers free PDF downloads for educational purposes. Connection Example Danfoss Provides a large selection of free eBooks in different genres, which are available for download in various formats, including PDF. Finding specific Connection Example Danfoss, especially related to Connection Example Danfoss, might be challenging as theyre often artistic creations rather than practical blueprints. However, you can explore the following steps to search for or create your own Online Searches: Look for websites, forums, or blogs dedicated to Connection Example Danfoss, Sometimes enthusiasts share their designs or concepts in PDF format. Books and Magazines Some Connection Example Danfoss books or magazines might include. Look for these in online stores or libraries. Remember that while Connection Example Danfoss, sharing copyrighted material without permission is not legal. Always ensure youre either creating your own or obtaining them from legitimate sources that allow sharing and downloading. Library Check if your local library offers eBook lending services. Many libraries have digital catalogs where you can borrow Connection Example Danfoss eBooks for free, including popular titles.Online Retailers: Websites like Amazon, Google Books, or Apple Books often sell eBooks. Sometimes, authors or publishers offer promotions or free periods for certain books.Authors Website

Occasionally, authors provide excerpts or short stories for free on their websites. While this might not be the Connection Example Danfoss full book , it can give you a taste of the authors writing style.Subscription Services Platforms like Kindle Unlimited or Scribd offer subscription-based access to a wide range of Connection Example Danfoss eBooks, including some popular titles.

FAQs About Connection Example Danfoss Books

How do I know which eBook platform is the best for me? Finding the best eBook platform depends on your reading preferences and device compatibility. Research different platforms, read user reviews, and explore their features before making a choice. Are free eBooks of good quality? Yes, many reputable platforms offer high-quality free eBooks, including classics and public domain works. However, make sure to verify the source to ensure the eBook credibility. Can I read eBooks without an eReader? Absolutely! Most eBook platforms offer webbased readers or mobile apps that allow you to read eBooks on your computer, tablet, or smartphone. How do I avoid digital eye strain while reading eBooks? To prevent digital eye strain, take regular breaks, adjust the font size and background color, and ensure proper lighting while reading eBooks. What the advantage of interactive eBooks? Interactive eBooks incorporate multimedia elements, quizzes, and activities, enhancing the reader engagement and providing a more immersive learning experience. Connection Example Danfoss is one of the best book in our library for free trial. We provide copy of Connection Example Danfoss in digital format, so the resources that you find are reliable. There are also many Ebooks of related with Connection Example Danfoss. Where to download Connection Example Danfoss online for free? Are you looking for Connection Example Danfoss PDF? This is definitely going to save you time and cash in something you should think about. If you trying to find then search around for online. Without a doubt there are numerous these available and many of them have the freedom. However without doubt you receive whatever you purchase. An alternate way to get ideas is always to check another Connection Example Danfoss. This method for see exactly what may be included and adopt these ideas to your book. This site will almost certainly help you save time and effort, money and stress. If you are looking for free books then you really should consider finding to assist you try this. Several of Connection Example Danfoss are for sale to free while some are payable. If you arent sure if the books you would like to download works with for usage along with your computer, it is possible to download free trials. The free guides make it easy for someone to free access online library for download books to your device. You can get free download on free trial for lots of books categories. Our library is the biggest of these that have literally hundreds of thousands of different products categories represented. You will also see that there are specific sites catered to different product types or categories, brands or niches related with Connection Example Danfoss. So depending on what exactly you are searching, you

will be able to choose e books to suit your own need. Need to access completely for Campbell Biology Seventh Edition book? Access Ebook without any digging. And by having access to our ebook online or by storing it on your computer, you have convenient answers with Connection Example Danfoss To get started finding Connection Example Danfoss, you are right to find our website which has a comprehensive collection of books online. Our library is the biggest of these that have literally hundreds of thousands of different products represented. You will also see that there are specific sites catered to different categories or niches related with Connection Example Danfoss So depending on what exactly you are searching, you will be able tochoose ebook to suit your own need. Thank you for reading Connection Example Danfoss. Maybe you have knowledge that, people have search numerous times for their favorite readings like this Connection Example Danfoss, but end up in harmful downloads. Rather than reading a good book with a cup of coffee in the afternoon, instead they juggled with some harmful bugs inside their laptop. Connection Example Danfoss is available in our book collection an online access to it is set as public so you can download it instantly. Our digital library spans in multiple locations, allowing you to get the most less latency time to download any of our books like this one. Merely said, Connection Example Danfoss is universally compatible with any devices to read.

Find Connection Example Danfoss :

for creators 58-94 digital marketing trends America 58-1768 digital
practices for small business 58-291 chatbot development best practices
checklist for creators 58-1757 cybersecurity checklist for entrepreneurs
58-1836 minimalist lifestyle apps America 58-346 minimalist lifestyle
58-998 cybersecurity review for entrepreneurs 58-1855 cybersecurity
~~58-2686 AI tools apps America 58-1091 AI tools apps America 58-2071 AI~~
business tools United States 58-2209 dropshipping business tools for
ecommerce trends strategies for entrepreneurs 58-2235 ecommerce trends
USA 58-421 SEO strategy tools United States 58-2457 SEO strategy tools
States 58-720 online privacy comparison for startups 58-1920 online
for beginners United States 58-222 electric vehicles for beginners for
business guide America 58-1511 online business guide America 58-2773
trends America 58-2001 startup funding trends for creators 58-1361
weight loss roadmap USA 58-84 weight loss roadmap United States 58-757
for creators 58-2619 electric vehicles ideas America 58-1979 electric

Connection Example Danfoss :

l adieu aux armes poche ernest hemingway maurice edgar - Dec 26 2022
web may 11 2017 l adieu aux armes frédéric henry jeune américain volontaire dans les ambulances sur le front d italie pendant la première guerre mondiale est blessé et s éprend de son infirmière catherine barkley avec catherine enceinte il tente de fuir la guerre et de passer en suisse où le destin les attend un des meilleurs romans de guerre
l adieu aux armes pdf docdroid - Jan 27 2023
web l adieu aux armes ernest hemingway traduit de l anglais par maurice e coindreau ebook réalisé par lotus16 2011 titre original a farewell to arms editions gallimard 1948 pour la traduction française
l adieu aux armes résumé détaillé du chef d œuvre d hemingway - May 31 2023
web l adieu aux armes d ernest hemingway est un roman emblématique de la littérature américaine du xxe siècle publié en 1929 il raconte l histoire d un jeune soldat américain frederic henry qui s engage dans l armée italienne pendant la première guerre mondiale
l adieu aux armes folio folio gallimard site gallimard - Nov 24 2022
web may 11 2017 nouvelle édition en 2017 collection folio n 27 gallimard parution 11 05 2017 frédéric henry jeune américain volontaire dans les ambulances sur le front d italie pendant la première guerre mondiale est blessé et s éprend de son infirmière catherine barkley
l adieu aux armes hemingway ernest 1899 1961 auteur - Apr 29 2023
web l un des plus beaux romans e crits a propos de la guerre 1914 1918 le he ros blesse quitte le combat il de serte et devra se refaire une vie marginale ecrit en 1929 traduit de a farewell to arms re impressions 1972 1982 1989 1990 1992 1996 1997 1999 2000 2002 2003 2006 2007 2009 2010
l adieu aux armes film 1932 allociné - Mar 17 2022
web synopsis nord de l italie en 1917 le lieutenant frédéric henry engagé volontaire américain dans le corps sanitaire de l armée italienne oeuvre sur le front où il porte assistance aux
l adieu aux armes film 1957 senscritique - Sep 22 2022
web blessé au front lors de la première guerre mondiale le jeune lieutenant américain frédéric henry est transporté dans un hôpital de milan il trouve un grand réconfort auprès de catherine barkley une infirmière anglaise dont il tombe amoureux
l adieu aux armes film 1957 allociné - Oct 24 2022
web synopsis blessé au front lors de la première guerre mondiale le jeune lieutenant américain frédéric henry est transporté dans un hôpital de milan il trouve un grand réconfort auprès de

l adieu aux armes ernest hemingway babelio - Sep 03 2023
web ernest hemingway l adieu aux armes 1929 il faut entendre l adieu aux armes comme le renoncement à tout ce qui pourrait faire le bonheur de l humanité d abords la guerre hideuse et invraisemblable qui envoie des générations d êtres humains à l abattoir ensuite les convenances qui empoisonnent la liberté de vivre et puis la
l adieu aux armes by ernest hemingway goodreads - Jul 01 2023
web l adieu aux armes ernest hemingway maurice edgar coindreau translator 3 81 312 440 ratings13 315 reviews frédéric henry jeune américain volontaire dans les ambulances sur le front d italie pendant la première guerre mondiale est blessé et s éprend de son infirmière catherine barkley
dr sümbül kaya irsem - Apr 17 2022
web ses travaux se situent au croisement de la sociologie et de la science politique l adieu aux armes parcours d anciens combattants karthala collection recherches internationales paris pp 83 110 rédaction de rapports et de programmes de recherche une armée au service de la présidence
l adieu aux armes ernest hemingway free download - Mar 29 2023
web mar 7 2023 l adieu aux armes by ernest hemingway publication date 1948 collection inlibrary printdisabled internetarchivebooks contributor internet archive language english access restricted item true addeddate 2023 03 07 00 19 19 autocrop version 0 0 14 books 20220331 0 2 bookplateleaf 0002 boxid ia40866707
l adieu aux armes film 1932 wikipédia - Feb 13 2022
web l adieu aux armes a farewell to arms est un film américain réalisé par frank borzage sorti en 1932 synopsis modifier modifier le code le lieutenant henry américain engagé auprès de l armée italienne contre l autriche comme ambulancier tombe amoureux d une infirmière qui ne lui dit pas qu elle est enceinte et
l adieu aux armes youtube - Jun 19 2022
web oct 4 2017 bande annonce du film l adieu aux armes 1932 résumé le lieutenant frederick henry américain engagé volontaire dans l armée italienne est tombé amoureux d une jeune infirmière
l adieu aux armes 1957 youtube - Aug 22 2022
web 0 00 2 32 l adieu aux armes 1957 cinemaetcie 44 5k subscribers subscribe 2 5k views 3 years ago bande annonce du film l adieu aux armes résumé hiver 1917 frederick henry un
françois d orcival aux États unis l improbable adieu aux armes - Jul 21 2022
web 2 days ago chronique les américains détiennent le record du monde de possession d armes individuelles après une nouvelle tuerie de masse ils s interrogent
amazon fr l adieu aux armes hemingway ernest livres - Feb 25 2023

web l adieu aux armes 9 20 242 en stock frédéric henry jeune américain volontaire dans les ambulances sur le front d italie pendant la première guerre mondiale est blessé et s éprend de son infirmière catherine barkley avec catherine enceinte il tente de fuir la guerre et de passer en suisse où le destin les attend

regarder l adieu aux armes en streaming complet justwatch - May 19 2022

web il est possible de louer l adieu aux armes sur filmo bbox vod en ligne et de télécharger sur filmo résumé blessé au front lors de la première guerre mondiale le jeune lieutenant américain frédéric henry est transporté dans un hôpital de milan

l adieu aux armes wikipédia - Oct 04 2023

web l adieu aux armes est le troisième roman d ernest hemingway publié en 1929 c est un roman d inspiration autobiographique dont l action se déroule en italie pendant la première guerre mondiale Écrit à la première personne il relate l histoire d amour tragique entre frederic henry ambulancier américain engagé dans l

l adieu aux armes hemingway résumé et analyse du roman - Aug 02 2023

web un roman important d ernest hemingway l adieu aux armes a été publié en 1929 l auteur s est directement inspiré de ses expériences et souvenirs personnels en effet il était ambulancier pour la croix rouge américaine pendant la première guerre mondiale

focus on dhet nsa conference pdf solutions milnerbrowne - Mar 08 2023

web focus on dhet nsa conference proceedings of the international conference on business and management dynamics 2016 sustainable economies in the information economy

focus on dhet nsa conference pdf uniport edu - Oct 23 2021

web may 1 2023 focus on dhet nsa conference 1 11 downloaded from uniport edu ng on may 1 2023 by guest focus on dhet nsa conference this is likewise one of the

focus on dhet nsa conference 2023 old syndeohro - Aug 01 2022

web 2 focus on dhet nsa conference 2023 01 02 tristian love disrupting higher education curriculum springer student attrition has been a perennial theme in south

focus on dhet nsa conference jetpack theaoi - Mar 28 2022

web focus on dhet nsa conference the new department was specifically established to focus on post school education and training holistically and has extended its scope of

ebook focus on dhet nsa conference - Oct 15 2023

web focus on dhet nsa conference work integrated learning in the 21st century mar 14 2022 this book explores new questions about the state of work and work readiness for

focus on dhet nsa conference cyberlab sutd edu sg - Aug 13 2023

web proceedings of the international conference on business and management dynamics 2016 sustainable economies in the information economy nov 16 2021 cape town

download free focus on dhet nsa conference - May 10 2023

web focus on dhet nsa conference skills development for sustainable manufacturing jul 18 2022 globally manufacturing facilities have taken a new turn with a mix of advanced

2022 dsa and natsec asia a resounding success says - Dec 05 2022

web mar 31 2022 kuala lumpur senior defence minister datuk seri hishammuddin hussein summed up the 2022 defence services asia dsa and national security

focus on dhet nsa conference - Nov 23 2021

web may 9th 2018 national speakers association nsa navigation home pre conference session where they have generously agreed to nsa community groups day with a

dhet pretoria facebook - Feb 07 2023

web dhet pretoria south africa 207 315 likes 1 069 talking about this 4 536 were here post school systems which are capable of contributing to the lives of individuals to the

dsa natsec asia platform penting tangani ancaman - Sep 02 2022

web kuala lumpur penganjuran acara seperti pameran perkhidmatan pertahanan asia dsa 2022 dan pameran keselamatan kebangsaan natsec asia penting sebagai

focus on dhet nsa conference festival raindance org - Apr 09 2023

web march 9th 2018 oursa conference responding to the that said the focus of this conference seems spot on how the nsa threatens national security for post

focus on dhet nsa conference leadership kingsley edu my - Jul 12 2023

web authority nsa about us focus on dhet amp nsa conference inseta dhet internship opportunities 2018 latestjobs national storage affiliates trust nominates

dhet day 2 of the 2nd national higher education facebook - Sep 14 2023

web day 2 of the 2nd national higher education conference the conference will continue where it left of yesterday plenary session 7 will focus on the

focus on dhet nsa conference - Jan 06 2023

web focus on dhet nsa conference dhet internship opportunities 2018 latestjobs may 10th 2018 the new department was specifically established to focus on post school

dsa natsec asia 2022 at mitec in march hishammuddin - Oct 03 2022

web level 4 lot 6 jalan 51 217 46050 petaling jaya selangor malaysia tel 603 7784 6688 fax 603 7785 2624 603 7785 2625
focus on dhet nsa conference 2023 ceu social - Apr 28 2022
web focus on dhet nsa conference this is likewise one of the factors by obtaining the soft documents of this focus on dhet nsa conference by online you might not require
focus on dhet nsa conference pdf uniport edu - May 30 2022
web focus on dhet nsa conference 2 10 downloaded from uniport edu ng on september 25 2023 by guest incentives to invest in security because they bear fully the costs of their
focus on dhet nsa conference pdf thegreenroute - Nov 04 2022
web 4 focus on dhet nsa conference 2020 08 09 university of western cape the centre for higher education transformation and the southern africa labour and development
focus on dhet nsa conference projects techhut - Feb 24 2022
web focus on dhet nsa conference downloaded from projects techhut tv by guest tyrone anna vocational education and training in southern africa bod books on demand
focus on dhet nsa conference help environment harvard edu - Jun 30 2022
web focus on dhet nsa conference the national skills development handbook 2010 11 nov 16 2022 planning training and development feb 07 2022 with forty well structured and
focus on dhet nsa conference survey thecube - Jan 26 2022
web hosts a successfultwo day national skills conference 2020 nsds to focus on long term dhet gov za issued by the nsa skills levy system
focus on dhet nsa conference festival raindance - Dec 25 2021
web focus on dhet nsa conference 2020 nsds to focus on mashongoane t dhet gov za issued by the nsa did you know the university research office is based at the govan
nsa officials call out chinese hackers stealthy and off limits - Jun 11 2023
web nov 10 2023 simultaneously the nsa says it s seeing a rise in china s use of previously unknown or zero day vulnerabilities a trend that researchers said thursday coincides
manual for ear training and sight singing karpinski - Jan 07 2023
web sep 1 2006 informed by gary karpinski s groundbreaking research on music perception and cognition and his two decades of practical teaching experience this innovative
manual for ear training and sight singing second edition - Dec 26 2021

manual for ear training and sight singing gary s karpinski w - Jul 13 2023
web a research based aural skills curriculum that reflects the way students learn manual for ear training and sight singing provides instruction and exercises for every type of activity
anthology for sight singing karpinski gary s - Feb 25 2022
web sep 7 2006 karpinski is the author of two textbooks published by w w norton manual for ear training and sight singing and anthology for sight singing which also
manual for ear training and sight singing by gary s - Oct 04 2022
web manual for ear training and sight singing karpinski s manual consists of seventy eight chapters presented in a carefully graduated course of study that is designed to take
manual for ear training and sight singing karpinski gary s - Aug 14 2023
web english xxiv 432 pages 28 cm includes indexes spiral bound machine generated contents note 1 the fundamentals of meter and rhythm 2 the fundamentals of pitch
instructor s dictation manual to accompany the manual for ear - Sep 22 2021

manual for ear training and sight singing paperback - Mar 29 2022
web manual for ear training and sight singing by karpinski gary s manual for ear training and sight singing provides instruction and exercises for every type of activity students
manual for ear training and sight singing gary steven - Feb 08 2023
web karpinski is the author of two textbooks published by w w norton manual for ear training and sight singing and anthology for sight singing which also include an
manual for ear training and sight singing karpinski - Jun 12 2023
web karpinski gary s gary steven publication date 2017 topics sight singing publisher new york london w w norton and company collection inlibrary printdisabled
manual for ear training and sight singing karpinski - Jul 01 2022
web jun 16 2017 buy manual for ear training and sight singing by gary s karpinski isbn 9780393614251 from amazon s book store free uk delivery on eligible orders
anthology for sight singing gary s karpinski w w norton - Sep 03 2022
web a research based aural skills curriculum that reflects the way students learn manual for ear training and sight singing provides instruction and exercises for every type of activity
manual for ear training and sight singing second edition - Apr 10 2023

web informed by gary karpinski s groundbreaking research on music perception and cognition and his two decades of practical teaching experience this innovative package

anthology for sight singing karpinski gary s gary steven - May 11 2023

web aug 30 2021 gary s karpinski w w norton incorporated aug 30 2021 464 pages manual for ear training and sight singing provides instruction and exercises for

karpinski instructor s dictation manual for manual for ear - Jan 27 2022

web feb 10 2023 instructor s dictation manual to accompany the manual for ear training and sight singing by gary s karpinski 2007 norton w w norton co ltd edition in

manual for ear training and sight singing by gary s - Nov 05 2022

web anthology for sight singing by gary s karpinski author university of massachusetts amherst karpinski carefully reviewed and organized every melody in the anthology to

manual for ear training and sight singing karpinski gary s - Nov 24 2021

manual for ear training and sight singing gary s karpinski - Dec 06 2022

web aug 30 2021 overview a research based aural skills curriculum that reflects the way students learn manual for ear training and sight singing provides instruction and

manual for ear training and sight singing gary steven - Mar 09 2023

web norton incorporated 2017 ear training 432 pages manual for ear training and sight singing provides instruction and exercises for every type of activity students complete in

manual for ear training and sight singing by gary s karpinski - Oct 24 2021

manual for ear training and sight singing by gary s karpinski - Aug 02 2022

web gary s karpinski gary steven karpinski richard kram norton 2017 music 752 pages karpinski carefully reviewed and organized every melody in the anthology to

manual for ear training and sight singing karpinski gary s - May 31 2022

web karpinski instructor s dictation manual for manual for ear training and sight singing pdf free ebook download as pdf file pdf or read book online for free

anthology for sight singing gary s karpinski gary steven - Apr 29 2022

web apr 28 2017 manual for ear training and sight singing second edition author karpinski gary s format paperback publish date apr 28 2017 isbn 10