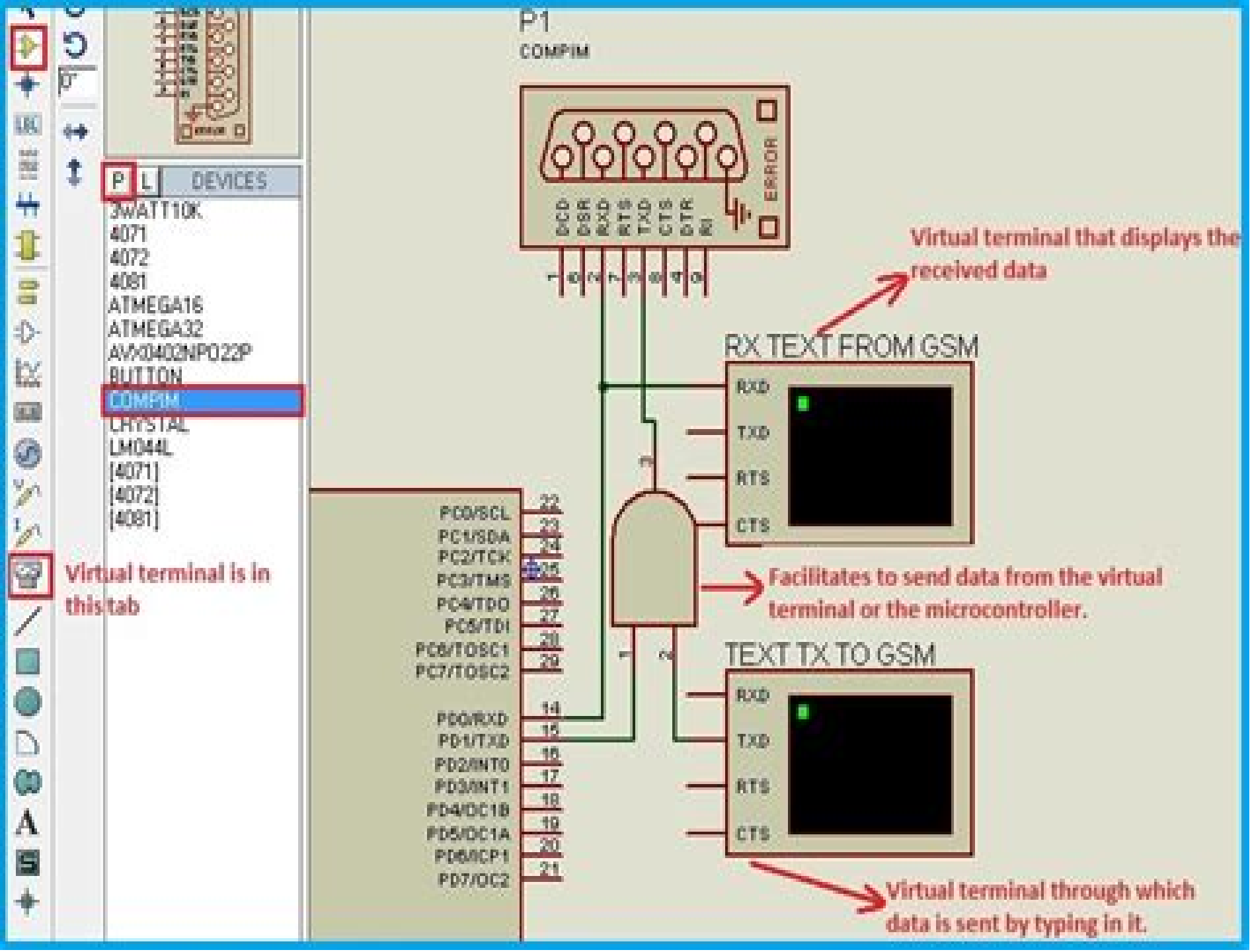
P1
COMPIM
DCD
DSR
RXD
RTS
TXD
CTS
DTR
RI
ERROR
P L DEVICES
3WATT10K
4071
4072
4081
ATMEGA16
ATMEGA32
AVX0402NP022P
BUTTON
COMPIM
CRYSTAL
LM044L
[4071]
[4072]
[4081]
Virtual terminal is in this tab
Virtual terminal that displays the received data
RX TEXT FROM GSM
RXD
TXD
RTS
CTS
Facilitates to send data from the virtual terminal or the microcontroller.
TEXT TX TO GSM
RXD
TXD
RTS
CTS
Virtual terminal through which data is sent by typing in it.
PC0/SCL
PC1/SDA
PC2/TCK
PC3/TMS
PC4/TDO
PC5/TDI
PC6/TOSC1
PC7/TOSC2
PD0/RXD
PD1/TXD
PD2/INT0
PD3/INT1
PD4/OC1B
PD5/OC1A
PD6/ICP1
PD7/OC2

Interfacing Gsm Module Using Proteus Simulation Software

Sabine Zange

Interfacing Gsm Module Using Proteus Simulation Software:

Thank you categorically much for downloading **Interfacing Gsm Module Using Proteus Simulation Software**.Maybe you have knowledge that, people have see numerous time for their favorite books in the manner of this Interfacing Gsm Module Using Proteus Simulation Software, but stop taking place in harmful downloads.

Rather than enjoying a good ebook like a cup of coffee in the afternoon, instead they juggled next some harmful virus inside their computer. **Interfacing Gsm Module Using Proteus Simulation Software** is approachable in our digital library an online access to it is set as public fittingly you can download it instantly. Our digital library saves in complex countries, allowing you to get the most less latency era to download any of our books in the manner of this one. Merely said, the Interfacing Gsm Module Using Proteus Simulation Software is universally compatible in imitation of any devices to read.

https://py.bijouxmedusa.com/About/publication/HomePages/cloud_computing_apps_united_states_5_763_cloud_computing_apps_for.pdf

Table of Contents Interfacing Gsm Module Using Proteus Simulation Software

1. Understanding the eBook Interfacing Gsm Module Using Proteus Simulation Software
    - The Rise of Digital Reading Interfacing Gsm Module Using Proteus Simulation Software
    - Advantages of eBooks Over Traditional Books
2. Identifying Interfacing Gsm Module Using Proteus Simulation Software
    - Exploring Different Genres
    - Considering Fiction vs. Non-Fiction
    - Determining Your Reading Goals
3. Choosing the Right eBook Platform
    - Popular eBook Platforms
    - Features to Look for in an Interfacing Gsm Module Using Proteus Simulation Software
    - User-Friendly Interface
4. Exploring eBook Recommendations from Interfacing Gsm Module Using Proteus Simulation Software
    - Personalized Recommendations

    - Interfacing Gsm Module Using Proteus Simulation Software User Reviews and Ratings
    - Interfacing Gsm Module Using Proteus Simulation Software and Bestseller Lists
5. Accessing Interfacing Gsm Module Using Proteus Simulation Software Free and Paid eBooks
    - Interfacing Gsm Module Using Proteus Simulation Software Public Domain eBooks
    - Interfacing Gsm Module Using Proteus Simulation Software eBook Subscription Services
    - Interfacing Gsm Module Using Proteus Simulation Software Budget-Friendly Options
6. Navigating Interfacing Gsm Module Using Proteus Simulation Software eBook Formats
    - ePub, PDF, MOBI, and More
    - Interfacing Gsm Module Using Proteus Simulation Software Compatibility with Devices
    - Interfacing Gsm Module Using Proteus Simulation Software Enhanced eBook Features
7. Enhancing Your Reading Experience
    - Adjustable Fonts and Text Sizes of Interfacing Gsm Module Using Proteus Simulation Software
    - Highlighting and Note-Taking Interfacing Gsm Module Using Proteus Simulation Software
    - Interactive Elements Interfacing Gsm Module Using Proteus Simulation Software
8. Staying Engaged with Interfacing Gsm Module Using Proteus Simulation Software
    - Joining Online Reading Communities
    - Participating in Virtual Book Clubs
    - Following Authors and Publishers Interfacing Gsm Module Using Proteus Simulation Software
9. Balancing eBooks and Physical Books Interfacing Gsm Module Using Proteus Simulation Software
    - Benefits of a Digital Library
    - Creating a Diverse Reading Collection Interfacing Gsm Module Using Proteus Simulation Software
10. Overcoming Reading Challenges
    - Dealing with Digital Eye Strain
    - Minimizing Distractions
    - Managing Screen Time
11. Cultivating a Reading Routine Interfacing Gsm Module Using Proteus Simulation Software
    - Setting Reading Goals Interfacing Gsm Module Using Proteus Simulation Software
    - Carving Out Dedicated Reading Time
12. Sourcing Reliable Information of Interfacing Gsm Module Using Proteus Simulation Software
    - Fact-Checking eBook Content of Interfacing Gsm Module Using Proteus Simulation Software

    - Distinguishing Credible Sources
13. Promoting Lifelong Learning
    - Utilizing eBooks for Skill Development
    - Exploring Educational eBooks
14. Embracing eBook Trends
    - Integration of Multimedia Elements
    - Interactive and Gamified eBooks

Interfacing Gsm Module Using Proteus Simulation Software Introduction

In todays digital age, the availability of Interfacing Gsm Module Using Proteus Simulation Software books and manuals for download has revolutionized the way we access information. Gone are the days of physically flipping through pages and carrying heavy textbooks or manuals. With just a few clicks, we can now access a wealth of knowledge from the comfort of our own homes or on the go. This article will explore the advantages of Interfacing Gsm Module Using Proteus Simulation Software books and manuals for download, along with some popular platforms that offer these resources. One of the significant advantages of Interfacing Gsm Module Using Proteus Simulation Software books and manuals for download is the cost-saving aspect. Traditional books and manuals can be costly, especially if you need to purchase several of them for educational or professional purposes. By accessing Interfacing Gsm Module Using Proteus Simulation Software versions, you eliminate the need to spend money on physical copies. This not only saves you money but also reduces the environmental impact associated with book production and transportation. Furthermore, Interfacing Gsm Module Using Proteus Simulation Software books and manuals for download are incredibly convenient. With just a computer or smartphone and an internet connection, you can access a vast library of resources on any subject imaginable. Whether youre a student looking for textbooks, a professional seeking industry-specific manuals, or someone interested in self-improvement, these digital resources provide an efficient and accessible means of acquiring knowledge. Moreover, PDF books and manuals offer a range of benefits compared to other digital formats. PDF files are designed to retain their formatting regardless of the device used to open them. This ensures that the content appears exactly as intended by the author, with no loss of formatting or missing graphics. Additionally, PDF files can be easily annotated, bookmarked, and searched for specific terms, making them highly practical for studying or referencing. When it comes to accessing Interfacing Gsm Module Using Proteus Simulation Software books and manuals, several platforms offer an extensive collection of resources. One such platform is Project Gutenberg, a nonprofit organization that provides over 60,000 free eBooks. These books are primarily in the public domain, meaning they can be freely distributed and downloaded. Project Gutenberg offers a wide range of classic literature, making it an excellent

resource for literature enthusiasts. Another popular platform for Interfacing Gsm Module Using Proteus Simulation Software books and manuals is Open Library. Open Library is an initiative of the Internet Archive, a non-profit organization dedicated to digitizing cultural artifacts and making them accessible to the public. Open Library hosts millions of books, including both public domain works and contemporary titles. It also allows users to borrow digital copies of certain books for a limited period, similar to a library lending system. Additionally, many universities and educational institutions have their own digital libraries that provide free access to PDF books and manuals. These libraries often offer academic texts, research papers, and technical manuals, making them invaluable resources for students and researchers. Some notable examples include MIT OpenCourseWare, which offers free access to course materials from the Massachusetts Institute of Technology, and the Digital Public Library of America, which provides a vast collection of digitized books and historical documents. In conclusion, Interfacing Gsm Module Using Proteus Simulation Software books and manuals for download have transformed the way we access information. They provide a cost-effective and convenient means of acquiring knowledge, offering the ability to access a vast library of resources at our fingertips. With platforms like Project Gutenberg, Open Library, and various digital libraries offered by educational institutions, we have access to an ever-expanding collection of books and manuals. Whether for educational, professional, or personal purposes, these digital resources serve as valuable tools for continuous learning and self-improvement. So why not take advantage of the vast world of Interfacing Gsm Module Using Proteus Simulation Software books and manuals for download and embark on your journey of knowledge?

FAQs About Interfacing Gsm Module Using Proteus Simulation Software Books

How do I know which eBook platform is the best for me? Finding the best eBook platform depends on your reading preferences and device compatibility. Research different platforms, read user reviews, and explore their features before making a choice. Are free eBooks of good quality? Yes, many reputable platforms offer high-quality free eBooks, including classics and public domain works. However, make sure to verify the source to ensure the eBook credibility. Can I read eBooks without an eReader? Absolutely! Most eBook platforms offer webbased readers or mobile apps that allow you to read eBooks on your computer, tablet, or smartphone. How do I avoid digital eye strain while reading eBooks? To prevent digital eye strain, take regular breaks, adjust the font size and background color, and ensure proper lighting while reading eBooks. What the advantage of interactive eBooks? Interactive eBooks incorporate multimedia elements, quizzes, and activities, enhancing the reader engagement and providing a more immersive learning experience. Interfacing Gsm Module Using Proteus Simulation Software is one of the best book in our library for free trial. We provide copy of Interfacing Gsm Module Using Proteus Simulation Software in digital format, so the resources that you find are reliable. There are also many Ebooks

of related with Interfacing Gsm Module Using Proteus Simulation Software. Where to download Interfacing Gsm Module Using Proteus Simulation Software online for free? Are you looking for Interfacing Gsm Module Using Proteus Simulation Software PDF? This is definitely going to save you time and cash in something you should think about. If you trying to find then search around for online. Without a doubt there are numerous these available and many of them have the freedom. However without doubt you receive whatever you purchase. An alternate way to get ideas is always to check another Interfacing Gsm Module Using Proteus Simulation Software. This method for see exactly what may be included and adopt these ideas to your book. This site will almost certainly help you save time and effort, money and stress. If you are looking for free books then you really should consider finding to assist you try this. Several of Interfacing Gsm Module Using Proteus Simulation Software are for sale to free while some are payable. If you arent sure if the books you would like to download works with for usage along with your computer, it is possible to download free trials. The free guides make it easy for someone to free access online library for download books to your device. You can get free download on free trial for lots of books categories. Our library is the biggest of these that have literally hundreds of thousands of different products categories represented. You will also see that there are specific sites catered to different product types or categories, brands or niches related with Interfacing Gsm Module Using Proteus Simulation Software. So depending on what exactly you are searching, you will be able to choose e books to suit your own need. Need to access completely for Campbell Biology Seventh Edition book? Access Ebook without any digging. And by having access to our ebook online or by storing it on your computer, you have convenient answers with Interfacing Gsm Module Using Proteus Simulation Software To get started finding Interfacing Gsm Module Using Proteus Simulation Software, you are right to find our website which has a comprehensive collection of books online. Our library is the biggest of these that have literally hundreds of thousands of different products represented. You will also see that there are specific sites catered to different categories or niches related with Interfacing Gsm Module Using Proteus Simulation Software So depending on what exactly you are searching, you will be able tochoose ebook to suit your own need. Thank you for reading Interfacing Gsm Module Using Proteus Simulation Software. Maybe you have knowledge that, people have search numerous times for their favorite readings like this Interfacing Gsm Module Using Proteus Simulation Software, but end up in harmful downloads. Rather than reading a good book with a cup of coffee in the afternoon, instead they juggled with some harmful bugs inside their laptop. Interfacing Gsm Module Using Proteus Simulation Software is available in our book collection an online access to it is set as public so you can download it instantly. Our digital library spans in multiple locations, allowing you to get the most less latency time to download any of our books like this one. Merely said, Interfacing Gsm Module Using Proteus Simulation Software is universally compatible with any devices to read.

Find Interfacing Gsm Module Using Proteus Simulation Software :

~~cloud computing apps United States 5-763 cloud computing apps for~~
5-531 crypto trading examples for creators 5-837 crypto trading examples
machine learning basics blueprint USA 5-643 machine learning basics
examples for entrepreneurs 5-476 wearable technology explained for
blockchain development step by step for small business 5-2732 blockchain
investing strategies USA 5-2041 crypto investing tips USA 5-344 crypto
cloud computing tools for startups 5-1619 cloud computing trends USA
science careers examples United States 5-829 data science careers
beginners America 5-2717 cybersecurity for beginners USA 5-633
blueprint America 5-2914 mobile app ideas blueprint USA 5-1703 mobile
study for small business 5-2512 electric vehicles checklist USA 5-2437
tutorial USA 5-1764 YouTube growth tutorial for entrepreneurs 5-1150
for small business 5-2528 online privacy software America 5-113 online
checklist for small business 5-2889 smart home tech checklist for
~~machine learning basics strategies for small business 5-94 machine~~

Interfacing Gsm Module Using Proteus Simulation Software :

A Course in Phonetics - Answers | PDF Answers to exercises in A Course in Phonetics. Chapter 1. A: (1) 1: upper lip. 2: (upper) teeth 3: alveolar ridge 34800259-a-course-in-phonetics-Answers.pdf - Answers to... Answers to exercises in A Course in Phonetics Chapter 1 A: (1) 1: upper lip ... Key is 6|3 = 63. Report values forLeaf column in increasing order and do not ... Answers to exercises in A Course in Phonetics. Chapter 1 Answers to exercises in A Course in Phonetics ; Chapter 1 ; (1) 1: upper lip ; 2: (upper) teeth ; 3: alveolar ridge. Chapter 2: Exercise J Chapter 2: Exercise J. Read the following passages in phonetic transcription. The first, which represents a form of British English of the kind spoken by ... A course in phonetics ladefoged 7th edition pdf answer key Dr. Johnson's research and teaching on acoustic phonetics and psycholinguistics is widely recognized. personal financial planning gitman Answers to exercises in ... Answer Key for Phonetics Exercises.docx View Answer Key for Phonetics Exercises.docx from LINGUISTIC 249 at Ivy Tech Community College, Indianapolis. Answer Key for Chapter 2 Phonetics Exercises ... Course in Phonetics Performance Exercise A Chapter 5. British English. American English. Untitled Document http://hctv.humnet.ucla.edu/departments/ ... Phonetics Exercise Answers English Language Esl

Learning Nov 29, 2023 — RELATED TO PHONETICS EXERCISE. ANSWERS ENGLISH LANGUAGE ESL. LEARNING FOR ALL AGES AND. READING LEVELS. • Go Math Answer Key · • Herbalism Guide ... Phonetics Exercises—Answers, P. 1 Answer the following questions. a). What voiced consonant has the same place of articulation as [t] and the same manner of articulation as [f]? ... Carmina Burana Vocal Score Schott Softcover Carmina Burana Vocal Score Schott Softcover ; Composer: Carl Orff ; Arranger: Henning Brauel ; Price: 35.00 (US) ; Inventory: #HL 49004001 ; ISBN: 9783795753382 ... Carmina Burana (Vocal Score) (HL-49004001) Price: $31.50 ... Piano reduction of the score with vocal parts. ... Length: 12.00 in. Width: 9.00 in. Series: Schott Format: ... Carmina Burana: Choral Score: Orff, Carl About the Score: As previously stated, this score contains Vocal Parts Only. With the exception of one or two movements, I found there was enough room to write ... Carmina Burana Score CARMINA BURANA COMPLETE VOCAL SCORE by Leonard Corporation, Hal (1991) Sheet music · 4.74.7 out of 5 stars (6) · Sheet music. $39.99$39.99. List: $49.99$49.99. Orff Carmina Burana Vocal Score Arranger: Henning Brauel Piano reduction of the score with vocal parts. Carmina Burana This choral score complements the hitherto available choral parts (ED 4920-01 and -02) presenting female and male voices in separate editions, as well as the ... Carmina Burana (Choral Score) (HL-49015666) Carmina Burana (Choral Score) - Featuring all new engravings, this publication includes the men's and women's choir parts together for the first time. Orff Carmina Burana Vocal Score The most popular vocal score for Orff's Carmina Burana is shown below. Rehearsal recordings to help learn your voice part (Soprano, Alto, Tenor ... Schott Carmina Burana (Vocal Score ... Schott Carmina Burana (Vocal Score) Vocal Score Composed by Carl Orff Arranged by Henning Brauel Standard ... Piano reduction of the score with vocal parts. Write ... Repair Manuals & Literature for Bentley Arnage Get the best deals on Repair Manuals & Literature for Bentley Arnage when you shop the largest online selection at eBay.com. Free shipping on many items ... Bentley Arnage R owner's manuals handbooks #0628 Buy premium quality Bentley Parts parts - Bentley Arnage R owner's manuals handbooks #0628 - Used owners manuals + handbooks has some slightly worn covers, ... BENTLEY ARNAGE T OWNERS' HANDBOOK This Is A New Handbook From Bentley Motors. Please Be Aware That It May Be A Re-Print. Notify me when in stock. Submit. Ask us about this part. Repair Manuals & Literature for 2001 Bentley Arnage Get the best deals on Repair Manuals & Literature for 2001 Bentley Arnage when you shop the largest online selection at eBay.com. Bentley Arnage Manuals Start Here: ; 2002 Bentley Owners Service Handbooks. Includes the Service Handbook, the Dealer Network book, and more. (B02_TSD7770 - Not a shop manual), $269.95. Bentley Arnage Automotive Repair Manuals Bentley Arnage Automotive Repair Manuals. Purpose of this is to catalog and include a comprehensive, relevant and accessible database for your Bentley Arnage. Repair manuals and video tutorials on BENTLEY ARNAGE Step-by-step DIY BENTLEY ARNAGE repair and maintenance · Arnage Saloon 2019 workshop manual online. How to change fuel filter on a car – replacement tutorial. Bentley Arnage Workshop Service Manuals Bentley Arnage Repair Manuals Online. We offer professional grade manuals for over 200000 vehicles,construction

equipment and motorcycles . 2001 Bentley Arnage Red Label Owner's Manual 2001 Bentley Arnage Red Label Owner's Manual. $1,416.21. Original factory manual used as a guide to operate your vehicle. ... Please call us toll free 866-586- ... Bentley & Rolls Royce Service Repair Manual This workshop repair service manual has detailed illustrations, diagrams, wiring diagrams and specifications as well as step-by-step instructions. Models ...