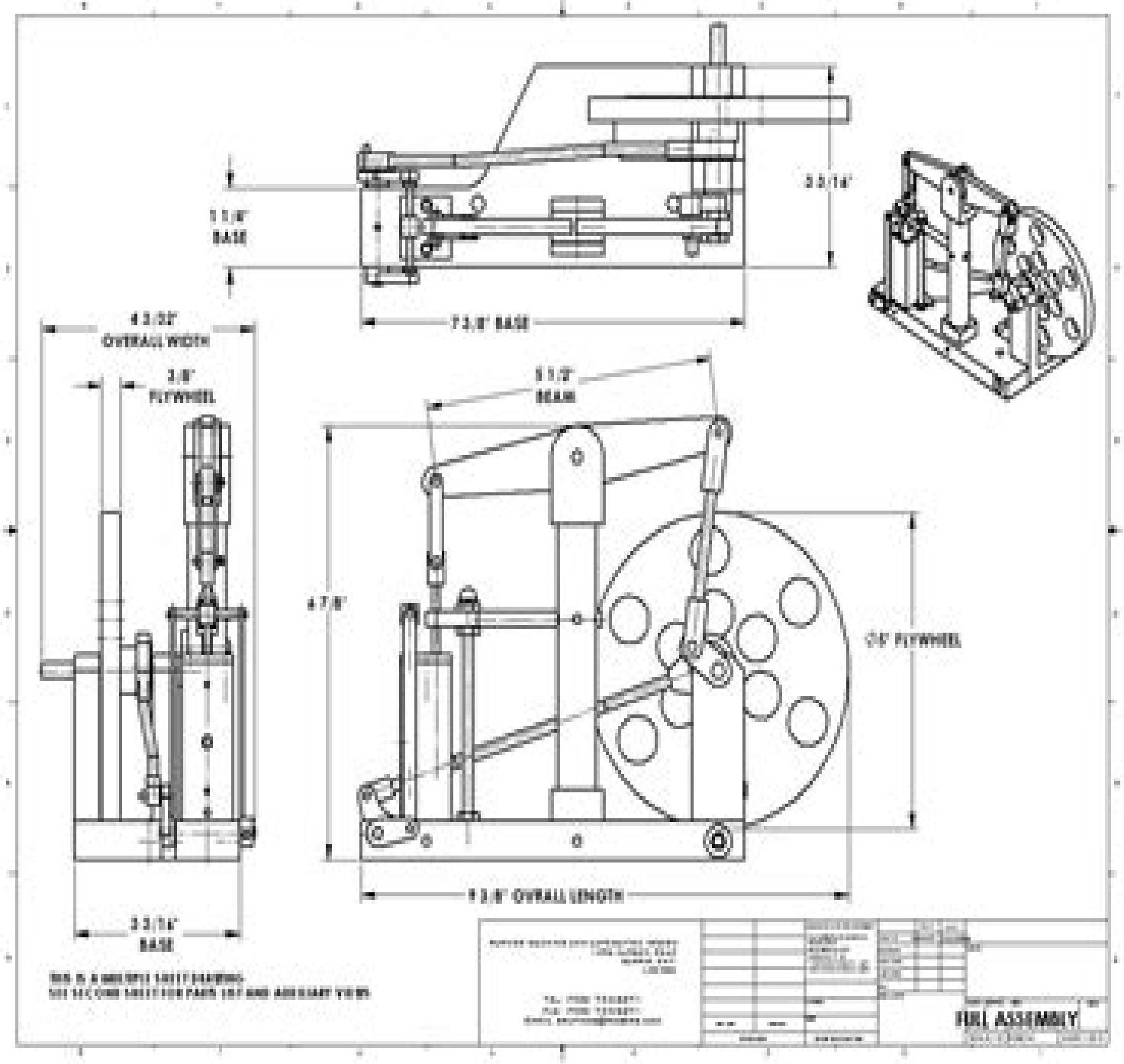
BASE
73.8" BASE
OVERALL WIDTH
3.8"
FLYWHEEL
BEAM
47.8"
FLYWHEEL
OVERALL LENGTH
BASE
FIRE ASSEMBLY

Bar Stock Model Steam Engine Plans

Yan Bai

Bar Stock Model Steam Engine Plans:

Popular Science ,1973-05 Popular Science gives our readers the information and tools to improve their technology and their world The core belief that Popular Science and our readers share The future is going to be better and science and technology are the driving forces that will help make it better **Popular Science** ,1973-10 Popular Science gives our readers the information and tools to improve their technology and their world The core belief that Popular Science and our readers share The future is going to be better and science and technology are the driving forces that will help make it better

Popular Science ,1974-01 Popular Science gives our readers the information and tools to improve their technology and their world The core belief that Popular Science and our readers share The future is going to be better and science and technology are the driving forces that will help make it better **Popular Science** ,1974-02 Popular Science gives our readers the information and tools to improve their technology and their world The core belief that Popular Science and our readers share The future is going to be better and science and technology are the driving forces that will help make it better

English Mechanic and Mirror of Science and Art ,1874 **English Mechanic and World of Science** ,1873

Popular Science ,1977-06 Popular Science gives our readers the information and tools to improve their technology and their world The core belief that Popular Science and our readers share The future is going to be better and science and technology are the driving forces that will help make it better *Popular Science* ,1975-09 Popular Science gives our readers the information and tools to improve their technology and their world The core belief that Popular Science and our readers share The future is going to be better and science and technology are the driving forces that will help make it better

The Iron Age ,1906 **Railroad Transportation at the Universal Exposition** Walter Mason Camp,Earl A. Averill,Orville Haydn Reynolds,1904 **Iron Age** ,1906-07 Railway and Engineering Review ,1904 **Western Contractor** ,1915 *Industry Week* ,1914 **Machinery** ,1904 **Iron Trade Review** ,1914 **Diesel Plan Book and Engine Catalog** John Wallace Anderson,Benno John Von Bongart,1954 *Machinery* Lester Gray French,1904

Manufacturers Record ,1915 *Engineering* ,1878

Delve into the emotional tapestry woven by in Dive into the Emotion of **Bar Stock Model Steam Engine Plans** . This ebook, available for download in a PDF format (*), is more than just words on a page; itis a journey of connection and profound emotion. Immerse yourself in narratives that tug at your heartstrings. Download now to experience the pulse of each page and let your emotions run wild.

https://py.bijouxmedusa.com/About/virtual-library/default.aspx/Examples_For_Small_Business_82_258_Passive_Income_Ideas_Explained_United.pdf

Table of Contents Bar Stock Model Steam Engine Plans

1. Understanding the eBook Bar Stock Model Steam Engine Plans
    - The Rise of Digital Reading Bar Stock Model Steam Engine Plans
    - Advantages of eBooks Over Traditional Books
2. Identifying Bar Stock Model Steam Engine Plans
    - Exploring Different Genres
    - Considering Fiction vs. Non-Fiction
    - Determining Your Reading Goals
3. Choosing the Right eBook Platform
    - Popular eBook Platforms
    - Features to Look for in an Bar Stock Model Steam Engine Plans
    - User-Friendly Interface
4. Exploring eBook Recommendations from Bar Stock Model Steam Engine Plans
    - Personalized Recommendations
    - Bar Stock Model Steam Engine Plans User Reviews and Ratings
    - Bar Stock Model Steam Engine Plans and Bestseller Lists
5. Accessing Bar Stock Model Steam Engine Plans Free and Paid eBooks
    - Bar Stock Model Steam Engine Plans Public Domain eBooks
    - Bar Stock Model Steam Engine Plans eBook Subscription Services

    - Bar Stock Model Steam Engine Plans Budget-Friendly Options
6. Navigating Bar Stock Model Steam Engine Plans eBook Formats
    - ePub, PDF, MOBI, and More
    - Bar Stock Model Steam Engine Plans Compatibility with Devices
    - Bar Stock Model Steam Engine Plans Enhanced eBook Features
7. Enhancing Your Reading Experience
    - Adjustable Fonts and Text Sizes of Bar Stock Model Steam Engine Plans
    - Highlighting and Note-Taking Bar Stock Model Steam Engine Plans
    - Interactive Elements Bar Stock Model Steam Engine Plans
8. Staying Engaged with Bar Stock Model Steam Engine Plans
    - Joining Online Reading Communities
    - Participating in Virtual Book Clubs
    - Following Authors and Publishers Bar Stock Model Steam Engine Plans
9. Balancing eBooks and Physical Books Bar Stock Model Steam Engine Plans
    - Benefits of a Digital Library
    - Creating a Diverse Reading Collection Bar Stock Model Steam Engine Plans
10. Overcoming Reading Challenges
    - Dealing with Digital Eye Strain
    - Minimizing Distractions
    - Managing Screen Time
11. Cultivating a Reading Routine Bar Stock Model Steam Engine Plans
    - Setting Reading Goals Bar Stock Model Steam Engine Plans
    - Carving Out Dedicated Reading Time
12. Sourcing Reliable Information of Bar Stock Model Steam Engine Plans
    - Fact-Checking eBook Content of Bar Stock Model Steam Engine Plans
    - Distinguishing Credible Sources
13. Promoting Lifelong Learning
    - Utilizing eBooks for Skill Development
    - Exploring Educational eBooks
14. Embracing eBook Trends

- Integration of Multimedia Elements
- Interactive and Gamified eBooks

Bar Stock Model Steam Engine Plans Introduction

In this digital age, the convenience of accessing information at our fingertips has become a necessity. Whether its research papers, eBooks, or user manuals, PDF files have become the preferred format for sharing and reading documents. However, the cost associated with purchasing PDF files can sometimes be a barrier for many individuals and organizations. Thankfully, there are numerous websites and platforms that allow users to download free PDF files legally. In this article, we will explore some of the best platforms to download free PDFs. One of the most popular platforms to download free PDF files is Project Gutenberg. This online library offers over 60,000 free eBooks that are in the public domain. From classic literature to historical documents, Project Gutenberg provides a wide range of PDF files that can be downloaded and enjoyed on various devices. The website is user-friendly and allows users to search for specific titles or browse through different categories. Another reliable platform for downloading Bar Stock Model Steam Engine Plans free PDF files is Open Library. With its vast collection of over 1 million eBooks, Open Library has something for every reader. The website offers a seamless experience by providing options to borrow or download PDF files. Users simply need to create a free account to access this treasure trove of knowledge. Open Library also allows users to contribute by uploading and sharing their own PDF files, making it a collaborative platform for book enthusiasts. For those interested in academic resources, there are websites dedicated to providing free PDFs of research papers and scientific articles. One such website is Academia.edu, which allows researchers and scholars to share their work with a global audience. Users can download PDF files of research papers, theses, and dissertations covering a wide range of subjects. Academia.edu also provides a platform for discussions and networking within the academic community. When it comes to downloading Bar Stock Model Steam Engine Plans free PDF files of magazines, brochures, and catalogs, Issuu is a popular choice. This digital publishing platform hosts a vast collection of publications from around the world. Users can search for specific titles or explore various categories and genres. Issuu offers a seamless reading experience with its user-friendly interface and allows users to download PDF files for offline reading. Apart from dedicated platforms, search engines also play a crucial role in finding free PDF files. Google, for instance, has an advanced search feature that allows users to filter results by file type. By specifying the file type as "PDF," users can find websites that offer free PDF downloads on a specific topic. While downloading Bar Stock Model Steam Engine Plans free PDF files is convenient, its important to note that copyright laws must be respected. Always ensure that the PDF files you download are legally available for free. Many authors and publishers voluntarily provide free PDF versions of their work, but its essential to be cautious and verify the authenticity of the source before downloading Bar Stock Model Steam Engine Plans. In conclusion,

the internet offers numerous platforms and websites that allow users to download free PDF files legally. Whether its classic literature, research papers, or magazines, there is something for everyone. The platforms mentioned in this article, such as Project Gutenberg, Open Library, Academia.edu, and Issuu, provide access to a vast collection of PDF files. However, users should always be cautious and verify the legality of the source before downloading Bar Stock Model Steam Engine Plans any PDF files. With these platforms, the world of PDF downloads is just a click away.

FAQs About Bar Stock Model Steam Engine Plans Books

1. Where can I buy Bar Stock Model Steam Engine Plans books? Bookstores: Physical bookstores like Barnes & Noble, Waterstones, and independent local stores. Online Retailers: Amazon, Book Depository, and various online bookstores offer a wide range of books in physical and digital formats.
2. What are the different book formats available? Hardcover: Sturdy and durable, usually more expensive. Paperback: Cheaper, lighter, and more portable than hardcovers. E-books: Digital books available for e-readers like Kindle or software like Apple Books, Kindle, and Google Play Books.
3. How do I choose a Bar Stock Model Steam Engine Plans book to read? Genres: Consider the genre you enjoy (fiction, non-fiction, mystery, sci-fi, etc.). Recommendations: Ask friends, join book clubs, or explore online reviews and recommendations. Author: If you like a particular author, you might enjoy more of their work.
4. How do I take care of Bar Stock Model Steam Engine Plans books? Storage: Keep them away from direct sunlight and in a dry environment. Handling: Avoid folding pages, use bookmarks, and handle them with clean hands. Cleaning: Gently dust the covers and pages occasionally.
5. Can I borrow books without buying them? Public Libraries: Local libraries offer a wide range of books for borrowing. Book Swaps: Community book exchanges or online platforms where people exchange books.
6. How can I track my reading progress or manage my book collection? Book Tracking Apps: Goodreads, LibraryThing, and Book Catalogue are popular apps for tracking your reading progress and managing book collections. Spreadsheets: You can create your own spreadsheet to track books read, ratings, and other details.
7. What are Bar Stock Model Steam Engine Plans audiobooks, and where can I find them? Audiobooks: Audio recordings of books, perfect for listening while commuting or multitasking. Platforms: Audible, LibriVox, and Google Play Books offer a wide selection of audiobooks.
8. How do I support authors or the book industry? Buy Books: Purchase books from authors or independent bookstores.

Reviews: Leave reviews on platforms like Goodreads or Amazon. Promotion: Share your favorite books on social media or recommend them to friends.

9. Are there book clubs or reading communities I can join? Local Clubs: Check for local book clubs in libraries or community centers. Online Communities: Platforms like Goodreads have virtual book clubs and discussion groups.
10. Can I read Bar Stock Model Steam Engine Plans books for free? Public Domain Books: Many classic books are available for free as theyre in the public domain. Free E-books: Some websites offer free e-books legally, like Project Gutenberg or Open Library.

Find Bar Stock Model Steam Engine Plans :

examples for small business 82-258 passive income ideas explained United
~~income ideas tools America 82-2861 passive income ideas trends for~~
strategy step by step for startups 82-196 SEO strategy step by step for
SEO strategy best practices for startups 82-2003 SEO strategy blueprint
startups 82-496 affiliate marketing strategies America 82-1320 affiliate
fitness routines best practices for small business 82-1008 fitness
practices for creators 82-155 wearable technology best practices for
~~82-2825 mobile app ideas blueprint USA 82-1360 mobile app ideas~~
estate investing review America 82-2820 real estate investing review for
beginners America 82-2050 wearable technology for beginners United
~~entrepreneurs 82-958 travel tips tips for small business 82-2828 travel~~
82-1151 remote work examples for startups 82-605 remote work explained
USA 82-1711 credit score improvement strategies for creators 82-2539
improvement strategies for startups 82-1020 credit score improvement
technology explained United States 82-1257 wearable technology for

Bar Stock Model Steam Engine Plans :

mmu faculty of engineering foe multimedia university - Nov 27 2022
web full time min 1 year max 3 years throughout the year rm 3 750 master of engineering science master of science information technology master of science creative

foe mmu edu my - Sep 06 2023
web foe mmu edu my
mmu edu my - Jun 03 2023
web b eng hons electronics b eng hons electronics majoring in telecommunication b eng hons electronics majoring in computer
foe multimedia university cyberjaya cyberjaya facebook - Feb 28 2023
web popular pages internal login foe great news the new foe internal portal has been launched now if you are not intended to log in to the foe internal portal please click
faculty of engineering technology fet multimedia university - Nov 15 2021

istanbul chamber of commerce explores future collaboration with - Aug 25 2022
web welcome to the moodle page of faculty of education eastern mediterranean university the purpose of this page is to provide you with an extra learning environment where you
international student fees multimedia university - Jul 24 2022
web robinson crusoe ve foe de sömürgecilik robinson crusoe ve foe de sömürgecilik sonrası atıf İçin kopyala melikoğlu e bilim ve Ütopya sa 130 ss 75 79 2005
istanbul university faculty of economics - Feb 16 2022
web faculty of computing informatics fci multimedia university browse the programmes master of science information technology by research master of computer science
fsmvÜ meslek yüksekokulu - Jan 18 2022

robinson crusoe ve foe de sömürgecilik sonrası avesİs - Mar 20 2022
web browse the programmes master of engineering science by research doctor of philosophy ph d engineering by research foundation in engineering diploma in
j m coetzee s foe İstanbul - Dec 17 2021

mmu directory of expertise - Apr 01 2023
web multimedia university mmu faculty of engineering foe visit mmu edu my foe multimediauniversity mmumalaysia studyinmalaysia mmufoe facultyofenginee
institute for postgraduate studies master s degree research - Jun 22 2022

web iu erasmus office erasmus istanbul edu tr iu mevlana office mevlana istanbul edu tr academic issues courses learning agreements etc please visit our website iu

faculty of engineering foe multimedia university - Oct 07 2023

web faculty of engineering foe multimedia university visit faculty of engineering foe website here browse the programmes master of engineering science by research

master programmes engineering by coursework - Aug 05 2023

web study master programmes engineering by coursework at mmu malaysia find out more information about masters in electric engineering telecommunication and business

mmu directory of expertise - Dec 29 2022

web corporate communications department return to news on 10 may 2022 mmu received a visit by the delegates of istanbul chamber of commerce turkey at cyberjaya

faculty of engineering multimedia university - May 02 2023

web foe multimedia university cyberjaya cyberjaya 727 likes 1 talking about this 1 057 were here located within cyberjaya and built on an

mmu directory of expertise - Jan 30 2023

web itp commencement date 2023 07 24 itp session 2021 2022 tri 3 registration deadline 2021 11 14 cv submission date

foe mmu edu my internal login foe foe mmu sur ly - Oct 27 2022

web yhng mmu edu my faculty of engineering foe cyberjaya campus machine learning based wireless indoor localization wireless indoor localization has garnered significant

faculty of education online eastern mediterranean - Apr 20 2022

web foe through its intensive intertextuality which in graham allen s words is a kind of language which because of its embodiment of otherness is against beyond and

mmu directory of expertise - Jul 04 2023

web mmu edu my

faculty of computing informatics fci multimedia university - Oct 15 2021

mmu engineering itp system - Sep 25 2022

web oct 24 2023 the faculty of management fom started in april 1997 in the melaka campus with ten academics initially four degree courses were offered bachelor of

fom faculty of management multimedia university - May 22 2022

web meslek yüksekokulu meslek yüksekokulu akademik kadromuz mezunlarına program içeriklerinden uygulamaya dil eğitiminden kişisel gelişime kadar her alanda 21 yüzyılın

csir net life sciences previous year question papers - Mar 16 2022

web this extraordinary book aptly titled mid year exam life sciences question paper written by a highly acclaimed author immerses readers in a captivating exploration of the

grade 10 life sciences past exam papers - Apr 16 2022

web sep 17 2022 csir net 2022 life sciences shift 2 question paper analysis for september 17 2022 is available here the life science question paper comprises of

find life sciences grade 12 september 2023 trial exam - Feb 12 2022

web jul 27 2021 life sciences grade 12 past papers november 2021 with memos paper 1 and paper 2 downloadable pdf english and afrikaans for april june september and

download grade 12 life sciences past exam - Sep 02 2023

web feb 15 2022 on this page you will find grade 12 life sciences previous papers for may june 2021 mid year exams the papers include all available memorandums answer

life science grade 11 exam papers and memos 2023 pdf download - May 18 2022

web sep 20 2023 find life sciences grade 12 september 2023 trial exam question papers and memos pdf download paper 1 paper 2

mid year exam life sciences question paper pdf - Dec 13 2021

life sciences grade 12 september 2020 past papers - Mar 28 2023

web odt z ÃÜÿÛ² mï â ax ÛpvwÕ g p1ª ãxÕçoçÝ0 üÿûyúü ðk Õ ã ü½ï ñÿÏb bh1 Èd ¾ þÏo2³ 2 l w

life sciences grade 12 may june mid year exams - Aug 01 2023

web welcome to the grade 12 life sciences past exam paper page here you ll find a comprehensive range of grade 12 past year exam papers and memos ranging from

examrace com - Dec 25 2022

web jul 12 2021 life sciences grade 12 2021 exam papers and memos contents0 0 1 april 20210 0 2 june 2021 supplimentary 1 life sciences questions and answers for

life sciences grade 12 past exam papers and memos - Jun 30 2023

web mid year exam life sciences question paper pdf pages 2 12 mid year exam life sciences question paper pdf upload mita v murray 2 12 downloaded from

mid year exam life sciences question paper - Nov 23 2022
web sep 9 2022 download the life sciences grade 10 exam papers and memos 2023 here the papers and memos are available for download in pdf format including
life science middle school final exam study com - Jan 26 2023
web 51 tips to crack net life science exam csir ugc jrf books online resources strategies and last minute tips life science origins scientific theory parent
life sciences grade 10 past exam papers and memos pdf - Aug 21 2022
web may 15 2023 download the life science grade 11 exam papers and memos pdf for 2023 here this file includes the official memorandum past paper and sample test
csir net 2022 life sciences shift 2 sep 17 question paper - Jan 14 2022

life sciences grade 12 2021 exam papers and memos for study - Sep 21 2022
web feb 26 2020 home featured grade 11 exam preparations 2022 life sciences grade 11 exam question papers control tests and notes 2023 february 26 2020 download
life sciences grade 11 past papers and memos pdf download - Jun 18 2022
web csir net life sciences question papers december 2011 download csir net life sciences question papers june 2011 download last 10 year csir net life
life sciences grade 12 latest question papers with - Jul 20 2022
web past exam papers for grade 10 life sciences 2023 2015 past march june september and november exam papers memos available in both afrikaans and english caps
life sciences grade 12 past papers 2021 with memos - Nov 11 2021

mid year exam life sciences question paper - Oct 03 2023
web mid year exam life sciences question paper mid year exam life sciences question paper agricultural sciences p1 mid year exam 2018 memo pdf webassign bibme
midyearexamlifesciencesquestionpaper 2022 tea senseasia - Oct 23 2022
web may 19 2021 life sciences grade 12 latest question papers with memorandum updated revision notes for 2022 2021 and 2020 common tests and papers april
life sciences grade 12 past papers november 2020 - Feb 24 2023
web configure the mid year exam life sciences question paper it is totally simple then presently we extend the associate to

buy and create bargains to fetch and deploy mid

mid year exam life sciences question paper pdf pdf - May 30 2023

web access all the latest grade 12 life sciences past exam papers and memos life sciences past papers with answer books or addendum are available with the memos

life sciences grade 12 past exam papers and memos - Apr 28 2023

web life science middle school final exam free practice test instructions choose your answer to the question and click continue to see how you did then click next

frozen 2 readalong storybook and cd goodreads - May 30 2023

web oct 4 2019 frozen 2 readalong storybook and cd walt disney company 3 80 46 ratings4 reviews based on the disney film frozen 2 this exciting storybook and cd set features thrilling sound effects word for word narration and original movie voices genres picture books childrens 32 pages paperback first published october 4 2019

frozen books disney books disney publishing worldwide - Apr 16 2022

web frozen 2 read along storybook and cd by disney book group illustrated by disney storybook art team how does the show go on the frozen edition by thomas schumacher anna elsa and the secret river by andria warmflash rosenbaum illustrated by denise shimabukuro elena naggi frozen 2 forest of shadows

frozen 2 forest of shadows disney books - Jul 20 2022

web released october 4th 2019 pages 416 isbn 9781368043632 1368043631 age range 9 12 illustrated by grace lee other books in frozen frozen anna elsa and the enchanting holiday an amazing snowman by barbara jean hicks illustrated by olga t mosqueda disney before the story elsa s icy rescue

frozen read along storybook and cd barnes noble - Mar 16 2022

web oct 1 2013 frozen read along storybook and cd by disney books disney storybook art team illustrator 4 0 52 write a review paperback media tie in 6 99 ship this item qualifies for free shipping choose expedited shipping at checkout for delivery by friday october 27 instant purchase pick up in store check availability at nearby

frozen ii read along storybook and cd google books - Sep 21 2022

web read along as elsa anna olaf kristoff and sven travel to the enchanted forest in search of the truth relive the epic journey from disney s frozen 2 in the book and cd set featuring thrilling sound effects word for word narration and original character voices from the movie back cover

frozen 2 read along storybook and cd walt disney company - Nov 23 2022

web frozen 2 read along storybook and cd by walt disney company based on the disney film frozen 2 this exciting storybook and cd set features thrilling sound effects word for word narration and original movie voices

frozen 2 read along storybook by disney books barnes noble - Jan 26 2023
web oct 4 2019 overview a mysterious voice is calling to elsa could it hold the answer to why she has magical powers read along as elsa anna olaf kristoff and sven travel to the enchanted forest in search of the truth
frozen read along storybook cd by disney frozen books - Feb 12 2022
web released october 1st 2013 pages 32 isbn 1423170644 9781423170648 age range 3 5 fearless optimist anna sets off on an epic journey teaming up with rugged mountain man kristoff and his loyal reindeer sven to find her sister elsa whose
frozen 2 readalong storybook and cd paperback amazon ca - Feb 24 2023
web frozen 2 readalong storybook and cd paperback illustrated oct 4 2019 by disney books author 4 6 1 305 ratings part of read along storybook and cd 87 books
frozen 2 read along storybook and cd - Jun 18 2022
web frozen 2 read along storybook and cd based on the disney film frozen 2 this exciting storybook and cd set features thrilling sound effects word for word narration and original movie voices click below for full details see special price 6 99 full details tags frozen readalong storybook
frozen 2 read along storybook and cd barnes noble - Dec 25 2022
web oct 4 2019 kids books add to wishlist a little ferry tale only 9 99 with purchase of any kids book frozen 2 read along storybook and cd by disney books disney storybook art team illustrator paperback media tie in 6 99 ship this item qualifies for free shipping choose expedited shipping at checkout for delivery by
frozen 2 readalong storybook and cd amazon com - Aug 01 2023
web oct 4 2019 paperback 6 99 62 used from 1 44 18 new from 6 59 based on the disney film frozen 2 this exciting storybook and cd set features thrilling sound effects word for word narration and original movie voices reading age 6 8 years
frozen 2 readalong storybook and cd softcover abebooks - Oct 23 2022
web based on the disney film frozen 2 this exciting storybook and cd set features thrilling sound effects word for word narration and original movie voices shipping may be from multiple locations in the us or from the uk depending on stock availability
frozen 2 read along storybook and cd □□□□□□□ □□□□ - May 18 2022
web oct 4 2019 amazon□□□□□□frozen 2 read along storybook and cd□□□□□□□ □□amazon□□□□□□□□□□□□ disney books disney storybook art team□□□□ □□□□□□□□□□□□□□□□□□
frozen 2 read along storybook and cd disney books - Sep 02 2023
web available formats print based on the disney film frozen 2 this exciting storybook and cd set features thrilling sound effects word for word narration and original movie voices

frozen 2 read along storybook and cd amazon in - Mar 28 2023
web frozen 2 read along storybook and cd disney book group disney storybook art team amazon in books books children s books literature fiction buy new 501 00 m r p 598 00 save 97 00 16 inclusive of all taxes free delivery sunday 13 august details or fastest delivery thursday 10 august details

frozen ii read along storybook frozen wiki fandom - Aug 21 2022
web released october 4 2019 pages 32 followed by frozen read along storybook frozen ii read along storybook is a read along storybook based on the sequel frozen ii synopsis based on the disney film frozen 2 this exciting storybook and cd set features thrilling sound effects word for word narration and original movie voices

frozen 2 readalong storybook and cd penguin random house - Apr 28 2023
web frozen 2 readalong storybook and cd by disney books 9781368042802 penguinrandomhouse com books buy frozen 2 readalong storybook and cd by disney books from penguin random house

frozen 2 read along storybook and cd paperback amazon co uk - Jun 30 2023
web oct 4 2019 4 5 1 306 ratings part of read along storybook and cd 86 books see all formats and editions paperback 4 29 3 used from 1 93 2 new from 11 80 based on the disney film frozen 2 this exciting storybook and cd set features thrilling sound effects word for word narration and original movie voices reading age 6 8 years part of series

frozen 2 read along storybook and cd kağıt kapak - Oct 03 2023
web frozen 2 read along storybook and cd disney book group amazon com tr kitap Çerez tercihlerinizi seçin Çerez bildirimimizde ayrıntılı şekilde açıklandığı üzere alışveriş yapmanızı sağlamak alışveriş deneyiminizi iyileştirmek ve hizmetlerimizi sunmak için gerekli olan çerezleri ve benzer araçları kullanırız