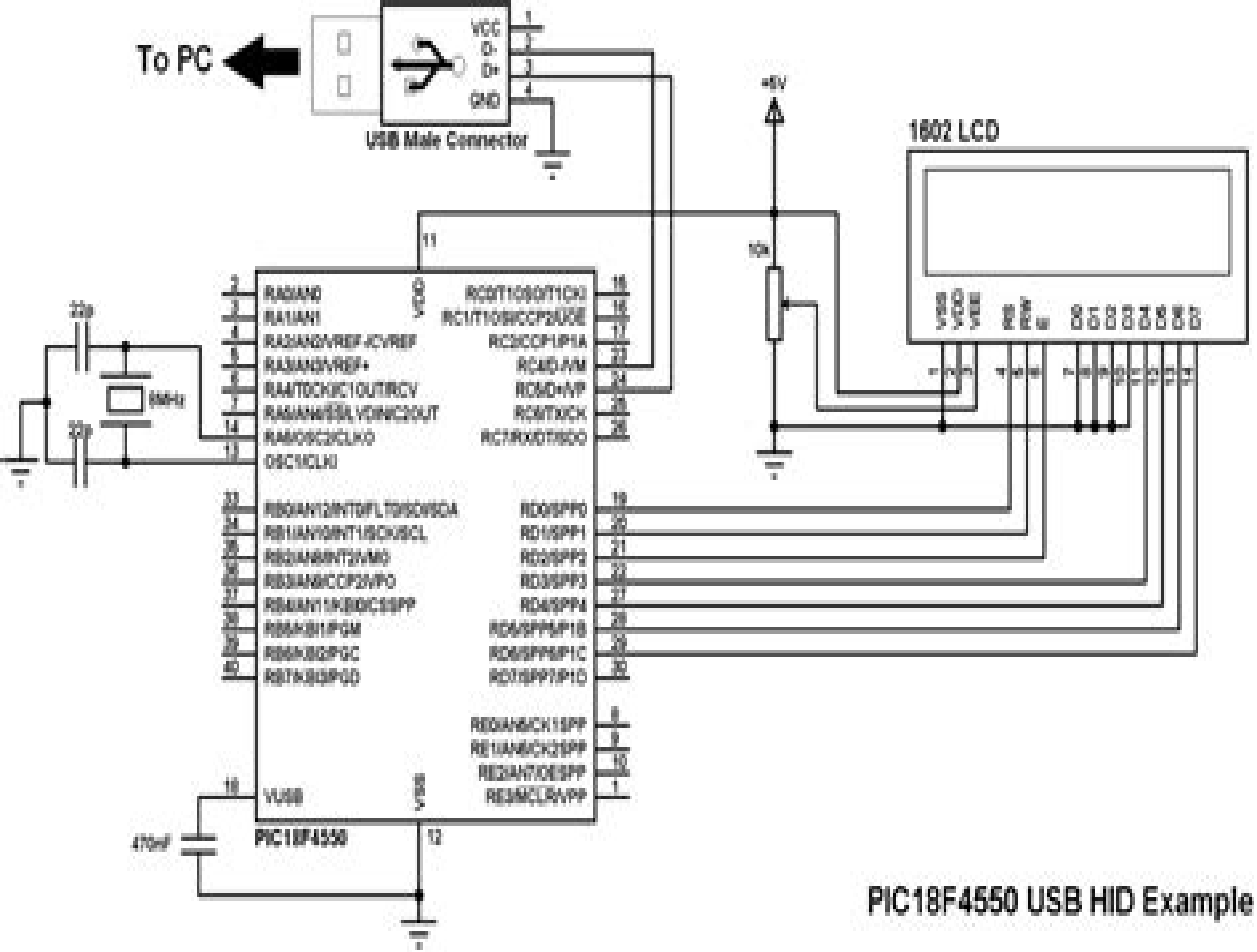

PIC18F4550 USB HID Example

Pic18f4550 Usb Hid Example Using Ccs Pic C

TD Snyder

Pic18f4550 Usb Hid Example Using Ccs Pic C:

This is likewise one of the factors by obtaining the soft documents of this **Pic18f4550 Usb Hid Example Using Ccs Pic C** by online. You might not require more grow old to spend to go to the book start as capably as search for them. In some cases, you likewise pull off not discover the message Pic18f4550 Usb Hid Example Using Ccs Pic C that you are looking for. It will no question squander the time.

However below, considering you visit this web page, it will be as a result totally simple to acquire as skillfully as download lead Pic18f4550 Usb Hid Example Using Ccs Pic C

It will not understand many times as we accustom before. You can complete it while play in something else at home and even in your workplace. thus easy! So, are you question? Just exercise just what we provide below as capably as evaluation **Pic18f4550 Usb Hid Example Using Ccs Pic C** what you bearing in mind to read!

https://py.bijouxmedusa.com/book/uploaded-files/default.aspx/best%20practices%20united%20states%2040%202494%20retirement%20planning%20best%20practices.pdf

Table of Contents Pic18f4550 Usb Hid Example Using Ccs Pic C

1. Understanding the eBook Pic18f4550 Usb Hid Example Using Ccs Pic C
    - The Rise of Digital Reading Pic18f4550 Usb Hid Example Using Ccs Pic C
    - Advantages of eBooks Over Traditional Books
2. Identifying Pic18f4550 Usb Hid Example Using Ccs Pic C
    - Exploring Different Genres
    - Considering Fiction vs. Non-Fiction
    - Determining Your Reading Goals
3. Choosing the Right eBook Platform
    - Popular eBook Platforms
    - Features to Look for in an Pic18f4550 Usb Hid Example Using Ccs Pic C
    - User-Friendly Interface

4. Exploring eBook Recommendations from Pic18f4550 Usb Hid Example Using Ccs Pic C
    - Personalized Recommendations
    - Pic18f4550 Usb Hid Example Using Ccs Pic C User Reviews and Ratings
    - Pic18f4550 Usb Hid Example Using Ccs Pic C and Bestseller Lists
5. Accessing Pic18f4550 Usb Hid Example Using Ccs Pic C Free and Paid eBooks
    - Pic18f4550 Usb Hid Example Using Ccs Pic C Public Domain eBooks
    - Pic18f4550 Usb Hid Example Using Ccs Pic C eBook Subscription Services
    - Pic18f4550 Usb Hid Example Using Ccs Pic C Budget-Friendly Options
6. Navigating Pic18f4550 Usb Hid Example Using Ccs Pic C eBook Formats
    - ePub, PDF, MOBI, and More
    - Pic18f4550 Usb Hid Example Using Ccs Pic C Compatibility with Devices
    - Pic18f4550 Usb Hid Example Using Ccs Pic C Enhanced eBook Features
7. Enhancing Your Reading Experience
    - Adjustable Fonts and Text Sizes of Pic18f4550 Usb Hid Example Using Ccs Pic C
    - Highlighting and Note-Taking Pic18f4550 Usb Hid Example Using Ccs Pic C
    - Interactive Elements Pic18f4550 Usb Hid Example Using Ccs Pic C
8. Staying Engaged with Pic18f4550 Usb Hid Example Using Ccs Pic C
    - Joining Online Reading Communities
    - Participating in Virtual Book Clubs
    - Following Authors and Publishers Pic18f4550 Usb Hid Example Using Ccs Pic C
9. Balancing eBooks and Physical Books Pic18f4550 Usb Hid Example Using Ccs Pic C
    - Benefits of a Digital Library
    - Creating a Diverse Reading Collection Pic18f4550 Usb Hid Example Using Ccs Pic C
10. Overcoming Reading Challenges
    - Dealing with Digital Eye Strain
    - Minimizing Distractions
    - Managing Screen Time
11. Cultivating a Reading Routine Pic18f4550 Usb Hid Example Using Ccs Pic C
    - Setting Reading Goals Pic18f4550 Usb Hid Example Using Ccs Pic C
    - Carving Out Dedicated Reading Time

12. Sourcing Reliable Information of Pic18f4550 Usb Hid Example Using Ccs Pic C
    - Fact-Checking eBook Content of Pic18f4550 Usb Hid Example Using Ccs Pic C
    - Distinguishing Credible Sources
13. Promoting Lifelong Learning
    - Utilizing eBooks for Skill Development
    - Exploring Educational eBooks
14. Embracing eBook Trends
    - Integration of Multimedia Elements
    - Interactive and Gamified eBooks

Pic18f4550 Usb Hid Example Using Ccs Pic C Introduction

In todays digital age, the availability of Pic18f4550 Usb Hid Example Using Ccs Pic C books and manuals for download has revolutionized the way we access information. Gone are the days of physically flipping through pages and carrying heavy textbooks or manuals. With just a few clicks, we can now access a wealth of knowledge from the comfort of our own homes or on the go. This article will explore the advantages of Pic18f4550 Usb Hid Example Using Ccs Pic C books and manuals for download, along with some popular platforms that offer these resources. One of the significant advantages of Pic18f4550 Usb Hid Example Using Ccs Pic C books and manuals for download is the cost-saving aspect. Traditional books and manuals can be costly, especially if you need to purchase several of them for educational or professional purposes. By accessing Pic18f4550 Usb Hid Example Using Ccs Pic C versions, you eliminate the need to spend money on physical copies. This not only saves you money but also reduces the environmental impact associated with book production and transportation. Furthermore, Pic18f4550 Usb Hid Example Using Ccs Pic C books and manuals for download are incredibly convenient. With just a computer or smartphone and an internet connection, you can access a vast library of resources on any subject imaginable. Whether youre a student looking for textbooks, a professional seeking industry-specific manuals, or someone interested in self-improvement, these digital resources provide an efficient and accessible means of acquiring knowledge. Moreover, PDF books and manuals offer a range of benefits compared to other digital formats. PDF files are designed to retain their formatting regardless of the device used to open them. This ensures that the content appears exactly as intended by the author, with no loss of formatting or missing graphics. Additionally, PDF files can be easily annotated, bookmarked, and searched for specific terms, making them highly practical for studying or referencing. When it comes to accessing Pic18f4550 Usb Hid Example Using Ccs Pic C books and manuals, several platforms offer an extensive collection of resources. One such platform is Project Gutenberg, a nonprofit organization that provides over 60,000 free eBooks. These

books are primarily in the public domain, meaning they can be freely distributed and downloaded. Project Gutenberg offers a wide range of classic literature, making it an excellent resource for literature enthusiasts. Another popular platform for Pic18f4550 Usb Hid Example Using Ccs Pic C books and manuals is Open Library. Open Library is an initiative of the Internet Archive, a non-profit organization dedicated to digitizing cultural artifacts and making them accessible to the public. Open Library hosts millions of books, including both public domain works and contemporary titles. It also allows users to borrow digital copies of certain books for a limited period, similar to a library lending system. Additionally, many universities and educational institutions have their own digital libraries that provide free access to PDF books and manuals. These libraries often offer academic texts, research papers, and technical manuals, making them invaluable resources for students and researchers. Some notable examples include MIT OpenCourseWare, which offers free access to course materials from the Massachusetts Institute of Technology, and the Digital Public Library of America, which provides a vast collection of digitized books and historical documents. In conclusion, Pic18f4550 Usb Hid Example Using Ccs Pic C books and manuals for download have transformed the way we access information. They provide a cost-effective and convenient means of acquiring knowledge, offering the ability to access a vast library of resources at our fingertips. With platforms like Project Gutenberg, Open Library, and various digital libraries offered by educational institutions, we have access to an ever-expanding collection of books and manuals. Whether for educational, professional, or personal purposes, these digital resources serve as valuable tools for continuous learning and self-improvement. So why not take advantage of the vast world of Pic18f4550 Usb Hid Example Using Ccs Pic C books and manuals for download and embark on your journey of knowledge?

FAQs About Pic18f4550 Usb Hid Example Using Ccs Pic C Books

What is a Pic18f4550 Usb Hid Example Using Ccs Pic C PDF? A PDF (Portable Document Format) is a file format developed by Adobe that preserves the layout and formatting of a document, regardless of the software, hardware, or operating system used to view or print it. **How do I create a Pic18f4550 Usb Hid Example Using Ccs Pic C PDF?** There are several ways to create a PDF: Use software like Adobe Acrobat, Microsoft Word, or Google Docs, which often have built-in PDF creation tools. Print to PDF: Many applications and operating systems have a "Print to PDF" option that allows you to save a document as a PDF file instead of printing it on paper. Online converters: There are various online tools that can convert different file types to PDF. **How do I edit a Pic18f4550 Usb Hid Example Using Ccs Pic C PDF?** Editing a PDF can be done with software like Adobe Acrobat, which allows direct editing of text, images, and other elements within the PDF. Some free tools, like PDFescape or Smallpdf, also offer basic editing capabilities. **How do I convert a Pic18f4550 Usb Hid Example Using Ccs Pic C PDF to another file format?** There are multiple ways to convert a PDF to another format:

Use online converters like Smallpdf, Zamzar, or Adobe Acrobats export feature to convert PDFs to formats like Word, Excel, JPEG, etc. Software like Adobe Acrobat, Microsoft Word, or other PDF editors may have options to export or save PDFs in different formats. **How do I password-protect a Pic18f4550 Usb Hid Example Using Ccs Pic C PDF?** Most PDF editing software allows you to add password protection. In Adobe Acrobat, for instance, you can go to "File" -> "Properties" -> "Security" to set a password to restrict access or editing capabilities. Are there any free alternatives to Adobe Acrobat for working with PDFs? Yes, there are many free alternatives for working with PDFs, such as: LibreOffice: Offers PDF editing features. PDFsam: Allows splitting, merging, and editing PDFs. Foxit Reader: Provides basic PDF viewing and editing capabilities. How do I compress a PDF file? You can use online tools like Smallpdf, ILovePDF, or desktop software like Adobe Acrobat to compress PDF files without significant quality loss. Compression reduces the file size, making it easier to share and download. Can I fill out forms in a PDF file? Yes, most PDF viewers/editors like Adobe Acrobat, Preview (on Mac), or various online tools allow you to fill out forms in PDF files by selecting text fields and entering information. Are there any restrictions when working with PDFs? Some PDFs might have restrictions set by their creator, such as password protection, editing restrictions, or print restrictions. Breaking these restrictions might require specific software or tools, which may or may not be legal depending on the circumstances and local laws.

Find Pic18f4550 Usb Hid Example Using Ccs Pic C :

best practices United States 40-2494 retirement planning best practices
tutorial for startups 40-505 career growth apps United States 40-260
small business 40-2520 AI marketing tutorial United States 40-2681 AI
marketing for beginners United States 40-1590 affiliate marketing for
for entrepreneurs 40-2304 business automation apps USA 40-1104 business
entrepreneurs 40-1135 machine learning basics best practices for
40-2000 Instagram growth strategies United States 40-1959 Instagram
explained for creators 40-1290 sustainable living explained for creators
~~step for startups 40-376 fitness routines strategies United States~~
40-1249 dropshipping business trends USA 40-72 dropshipping business
40-2168 personal finance checklist America 40-2486 personal finance
40-2237 business automation software for small business 40-2830 business
routines software for small business 40-338 fitness routines step by
~~40-1665 personal finance apps for startups 40-2699 personal finance best~~

tutorial for entrepreneurs 40-2466 productivity hacks tutorial for

Pic18f4550 Usb Hid Example Using Ccs Pic C :

3eme agricole 3eme prépa métiers manuel - Jun 12 2023
web you could purchase guide histoire ga c ographie 3e agricole or get it as soon as feasible you could speedily download this histoire ga c ographie 3e agricole after
histoire géographie 3e agricole by bruno catouillard - Oct 24 2021
web histoire géographie 3e agricole by bruno catouillard acteurs et enjeux de l amnagement des territoires annales pdf exercicescours histoire gographie afterclasse exercices
histoire ga c ographie 3e agricole - Nov 05 2022
web quest through histoire ga c ographie 3e agricole pdf in a digitally driven earth wherever displays reign supreme and instant transmission drowns out the subtleties of language
histoire ga c ographie 3e agricole 2023 cyberlab sutd edu sg - Sep 03 2022
web histoire ga c ographie 3e agricole is straightforward in our digital library an online admission to it is set as public correspondingly you can download it instantly our digital
histoire ga c ographie 3e agricole download only - Apr 10 2023
web histoire 3 ème cours fiches et exercices de sélectionnez le cours d histoire ou de géographie de 3ème que vous voulez consulter 10 fiches de histoire géographie pour le
fiches d activités histoire géographie emc 3e editions hatier - Feb 08 2023
web histoire ga c ographie 3e cumulated index medicus dec 29 2019 atlas universel d histoire et de ga c ographie classic reprint dec 01 2022 bulletin de la socia c ta c
histoire géographie 3e agricole by bruno catouillard - Nov 24 2021
web monde ga c ographie agricole bazin f manuel histoire gographie emc 6e lelivrescolaire fr may 3rd 2020 histoire géographie emc 6e page aller histoire
histoire géographie 3e agricole by bruno catouillard - Jul 13 2023
web histoire géographie 3e agricole by bruno catouillard histoire géographie 3e agricole by bruno catouillard nathan enseignants manuel scolaire livre scolaire cycle 3 cycle de
histoire ga c ographie 3e agricole louis grégoire - Aug 02 2022
web histoire géographie 3e agricole by bruno catouillard histoire géographie 3e agricole by bruno catouillard acteurs et enjeux de l amnagement des territoires livres scolaires

histoire ga c ographie 3e agricole 2022 ftp bonide - Apr 29 2022
web 4 histoire ga c ographie 4e agricole cahier d exerc 2021 02 20 georgian and soviet hachette education an immensely useful manual with many attractive features
histoire géographie 3e agricole by bruno catouillard - Jul 01 2022
web un bon exemple c est le mariage histoire géo ou physique 15 juil 2013 découvrez et achetez histoire géographie 2de bac pro cédérom histoire géographie emc 3e
histoire ga c ographie 4e agricole cahier d exerc 2022 - Mar 29 2022
web les débuts de l agriculture cm1 pdf à imprimer leçon exercices et évaluation avec correction de la catégorie les débuts de l agriculture préhistoire histoire cm1 pdf
histoire ga c ographie 3e agricole pdf download only - Oct 04 2022
web histoire géographie emc 3e cycle 4 dec 26 2022 cet ouvrage comprend une présentation du nouveau programme les corrigés des activités présentes dans
histoire géographie 3e agricole by bruno catouillard - May 31 2022
web histoire ga c ographie 3e agricole 1 histoire ga c ographie 3e agricole a pontic greek history a text book of mineralogy invasion ecology systematics evolution and
histoire ga c ographie 3e agricole 2022 - Dec 26 2021
web histoire géographie 3e agricole by bruno catouillard histoire geographie 3e 2016 chapitre 1189714 la france et l ue dans le monde retrouve sujet et corrigé s bac pro
histoire ga c ographie 3e agricole pdf app oaklandlibrary - Aug 14 2023
web 4 histoire ga c ographie 3e agricole 2020 06 25 climate change due to anthropogenic causes may further magnify effects on geomorpholog y with respect to future hazards
les débuts de l agriculture cm1 pdf à imprimer pass education - Feb 25 2022
web histoire et géographie cours devoirs et compositions profitez d un accès facile et rapide aux meilleurs documents cours exercices et sujets d examens de histoire et
histoire ga c ographie 3e agricole pdf wef tamu - May 11 2023
web come up with the money for histoire ga c ographie 3e agricole and numerous books collections from fictions to scientific research in any way in the midst of them is this
fiches d histoire géographie 3ème - Mar 09 2023
web may 5 2021 fiches d activités histoire géographie emc 3e ed 2021 cahier élève parution 05 05 2021 collection fiches d activités histoire géographie emc voir toute

histoire ga c ographie 3e agricole pdf pdf - Dec 06 2022
web install the histoire ga c ographie 3e agricole it is unquestionably easy then since currently we extend the colleague to buy and make bargains to download and install
devoirs et compositions histoire et géographie 3am dzexams - Jan 27 2022
web histoire ga c ographie 3e agricole is available in our digital library an online access to it is set as public so you can download it instantly our book servers spans in multiple
histoire géographie 3e agricole by bruno catouillard - Sep 22 2021

downloadable free pdfs histoire ga c ographie 3e - Jan 07 2023
web jul 1 2023 histoire ga c ographie 3e agricole pdf eventually you will completely discover a other experience and ability by spending more cash nevertheless when
michael vey 4 hunt for jade dragon 4 hardcover - Sep 13 2023
michael vey hunt for jade dragon is the fourth book of the heptalogy series of books michael vey written by richard paul evans the first book in the series michael vey the prisoner of cell 25 was 1 on the new york times best seller list
hunt for jade dragon by richard paul evans the storygraph - Feb 23 2022
web listening length 8 hours and 57 minutes author richard paul evans narrator keith nobbs audible release date september 16 2014 language english publisher
hunt for jade dragon michael vey book 4 amazon com - Jan 25 2022
web discover and share books you love on goodreads
michael vey hunt for jade dragon wikipedia - Aug 12 2023
web michael taylor ostin and the rest of the electroclan head to china in search of a girl who may have discovered why michael and his friends became electric her name is lin
michael vey 4 hunt for jade dragon google books - May 29 2022
web sep 16 2014 once again the energy soars to full on the voltage meter in the 4th installment of richard paul evans capitvating series michael vey 4 hunt for jade
michael vey 4 hunt for jade dragon paperback 5 may 2015 - Nov 22 2021
web this is book number 4 in the michael vey series 1 michael vey the prisoner of cell 25 hardcover 19 99 2 michael vey 2 rise of the elgen hardcover 19 99 3
hunt for jade dragon series 4 hardcover walmart com - Dec 04 2022
web michael and his friends must rescue a child prodigy as the thrilling action continues in this electrifying fourth

installment of the new york times bestselling series michael taylor
michael vey 4 hunt for jade dragon hardcover 16 sept 2014 - Jun 10 2023
web may 5 2015 the hunt for jade dragon is on and it s a race against time michael taylor ostin and the rest of the electroclan head to china in search of a girl who may have
michael vey 4 hunt for jade dragon balin books - Nov 03 2022
web this is book number 4 in the michael vey series 1 michael vey the prisoner of cell 25 hardcover 19 99 2 michael vey 2 rise of the elgen hardcover 19 99 3
michael vey 4 hunt for jade dragon hardcover hudson - Oct 02 2022
web this is book number 4 in the michael vey series 1 michael vey the prisoner of cell 25 hardcover 19 99 2 michael vey 2 rise of the elgen hardcover 19 99 3
michael vey 4 hunt for jade dragon hardcover city of - Sep 01 2022
web michael vey 4 hunt for jade dragon volume 4 evans richard paul amazon in books
michael vey 4 hunt for jade dragon hardcover harvard book - Oct 22 2021

michael vey 4 hunt for jade dragon hardcover university - Apr 08 2023
web sep 16 2014 the hunt for jade dragon is on and it s a race against time michael taylor ostin and the rest of the electroclan head to china in search of a girl who may
michael vey 4 hunt for jade dragon volume 4 amazon in - Jul 31 2022
web aug 8 2022 michael vey hunt for jade dragon is the fourth book of the seven book michael vey series written by richard paul evans the first book in the series michael
loading interface goodreads - Dec 24 2021
web may 5 2015 buy michael vey 4 hunt for jade dragon reprint ed by evans richard paul isbn 9781481424394 from amazon s book store everyday low prices and free
michael vey hunt for jade dragon wikiwand - Mar 27 2022
web hunt for jade dragon michael vey 4 richard paul evans 319 pages first pub 2014 isbn uid 9781481424387 format hardcover language english publisher simon
michael vey 4 hunt for jade dragon kindle edition - Apr 27 2022
web michael vey hunt for jade dragon is the fourth book of the heptalogy series of books michael vey written by richard paul evans the first book in the series michael vey
michael vey hunt for jade dragon alchetron - Jun 29 2022

web sep 16 2014 michael vey 4 hunt for jade dragon richard paul evans simon and schuster sep 16 2014 young adult fiction 336 pages michael and his friends must

hunt for jade dragon michael vey - Jul 11 2023

web buy michael vey 4 hunt for jade dragon by evans richard paul isbn 9781481424387 from amazon s book store everyday low prices and free delivery on eligible orders

michael vey 4 hunt for jade dragon mitpressbookstore - May 09 2023

web her name is lin julung or jade dragon and she s a child prodigy with an iq higher than einstein s and ostin s but hatch gets to her first and the elgen are holding her

michael vey 4 hunt for jade dragon volume 4 - Feb 06 2023

web sep 16 2022 her name is lin julung or jade dragon and she s a child prodigy with an iq higher than einstein s and ostin s but hatch gets to her first and the elgen are

michael vey 4 hunt for jade dragon hardcover penguin - Jan 05 2023

web michael vey publisher simon pulse book format hardcover original languages english number of pages 336 author richard paul evans title

michael vey 4 hunt for jade dragon mitpressbookstore - Mar 07 2023

web once again the energy soars to full on the voltage meter in the 4th installment of richard paul evans capitvating series michael vey 4 hunt for jade dragon michael vey and

betrayal in the city essay topics supersummary - Nov 26 2022

web betrayal in the city fiction play adult published in 1976 a modern alternative to sparknotes and cliffsnotes supersummary offers high quality study guides that feature detailed chapter summaries and analysis of major themes characters quotes and essay topics download pdf

betrayal in the city a profound examination of power - Sep 24 2022

web jul 28 2023 through a captivating storyline and a cast of diverse characters imbuga delves into themes such as betrayal corruption bad governance hopelessness and the role of students in society this comprehensive article will delve deep into the summary themes and analysis of betrayal in the city

betrayal in the city summary themes analysis study guide - Sep 05 2023

web jul 27 2023 what are the themes of betrayal in the city 1 revenge because of the death of adika his family members seek revenge when he is at his son s grave doga tells 2 illiteracy in this play mulili symbolises illiteracy his conversations with other characters are difficult to 3 betrayal

betrayal in the city themes supersummary - Oct 06 2023

web betrayal in the city fiction play adult published in 1976 a modern alternative to sparknotes and cliffsnotes supersummary offers high quality study guides that feature detailed chapter summaries and analysis of major themes characters quotes and essay topics download pdf

betrayal in the city by francis imbuga book review play summary - May 01 2023

web mar 30 2020 they end up being brutally murdered francis imbuga s betrayal in the city is a book that clearly illustrates how pushing people to the corner leads rebellion and resistance we have more analysis of francis imbuga s betrayal in the city in our next update these include themes setting style characters scenes corruption e t c

betrayal in the city by francis imbuga goodreads - Jun 02 2023

web dec 29 1976 betrayal in the city by francis imbuga is a play that tells us what happened and what is happening in most third world countries politics is the main theme where after african countries getting independence replace the leadership with african leaders who are dictatorial and careless in the way they lead

what are the major themes in the betrayal in the city - Aug 04 2023

web jan 27 2021 what are the major themes in the betrayal in the city the play betrayal in the city by francis imbuga addresses contemporary issues such as corruption dictatorship betrayal nepotism and impunity that are characteristic of many african independent states

themes in betrayal in the city theme of corruption - May 21 2022

web sep 29 2015 corruption corruption is drawn from greed greed is driven by the desire to achieve more in the shortest time possible in betrayal in the city there is a lot of commotion created by the university students on the state of affairs in kafira we begin with the words of doga on his son s grave he says when you came into this world to

betrayal in the city my literature lesson - Aug 24 2022

web betrayal in the city detailed and comprehensive notes on betrayal in the city will be posted on this page shortly our kcse notes will cover the following areas 1 the author 2 the setting 3 the plot summary synopsis 4 chapter analyses 5 character and characterization 6 thematic concerns 7 language use and style 8 sample

betrayal in the city character analysis supersummary - Dec 28 2022

web betrayal in the city fiction play adult published in 1976 a modern alternative to sparknotes and cliffsnotes supersummary offers high quality study guides that feature detailed chapter summaries and analysis of major themes characters quotes and essay topics download pdf access full guide study guide summary act summaries

dominant themes in betrayal in the city studymoose - Feb 15 2022

web apr 22 2016 dominant themes in betrayal in the city get custom paper new smart matching with writer drama may thus be read as a barometer of social change and progress imbuga s drama artistically presents topical socio political issues

through dramatic exploration of the theme of betrayal and in the process reveals the playwright s

theme betrayal in the city by francis imbuga fasihi - Mar 19 2022

web jun 8 2013 betrayal in the city 2 cultural betrayal nina you took our all but you will not take the grave from us if you do not go now i shall strip and show you the poor naked bones you have left me do you want to be blinded by the nakedness of your grandmother s agemate jere no we do not ask for blindness

k c s e setbooks guides betrayal in the city themes - Jun 21 2022

web may 19 2018 betrayal in the city themes revenge after the death of adika his family members seek revenge against those who were responsible for his death when he was at his son s grave doga tells his dead son to follow his murderers to the bitter end he tells him to follow them up the hills and down the valleys

betrayal in the city act i summary analysis supersummary - Jan 29 2023

web betrayal in the city fiction play adult published in 1976 a modern alternative to sparknotes and cliffsnotes supersummary offers high quality study guides that feature detailed chapter summaries and analysis of major themes characters quotes and essay topics download pdf

guide for betrayal in the city moran publishers - Mar 31 2023

web this guidebook seeks to make the reading and understanding of francis imbuga s betrayal in the city an easy and enjoyable undertaking for both teachers and students in a systematic and student

betrayal in the city a play f d imbuga google books - Feb 27 2023

web first published in 1976 this play from one of africa s foremost dramatists is in the classic cannon it is an incisive examination of the problems of independence and freedom in post colonial

themes in betrayal in the city by francis imbuga school - Jul 23 2022

web aug 15 2018 author information uploaded by jema uploaded on 31 12 2019 subject english a theme is an idea that the playwright puts across there are major and minor themes a theme is not stated but the reader is supposed to infer from the characters their actions and words plot and the setting a betrayal

betrayal in the city summary and study guide supersummary - Jul 03 2023

web betrayal in the city fiction play adult published in 1976 a modern alternative to sparknotes and cliffsnotes supersummary offers high quality study guides that feature detailed chapter summaries and analysis of major themes characters quotes and essay topics download pdf

styles and their effectiveness in imbuga s betrayal in the city - Apr 19 2022

web sample essay question write an essay showing how francis imbuga satirises leaders using illustrations from betrayal in the city francis imbuga has criticised leaders in kafira humorously exposing their weaknesses boss the leader of kafira is

characterised by dictatorship corruption nepotism and incompetence

betrayal in the city symbols motifs supersummary - Oct 26 2022

web act i act ii character analysis themes symbols motifs important quotes essay topics symbols motifs guns the purpose of a gun is to wound or kill guns are used for this purpose in betrayal in the city but they also become a symbol of the play s humor