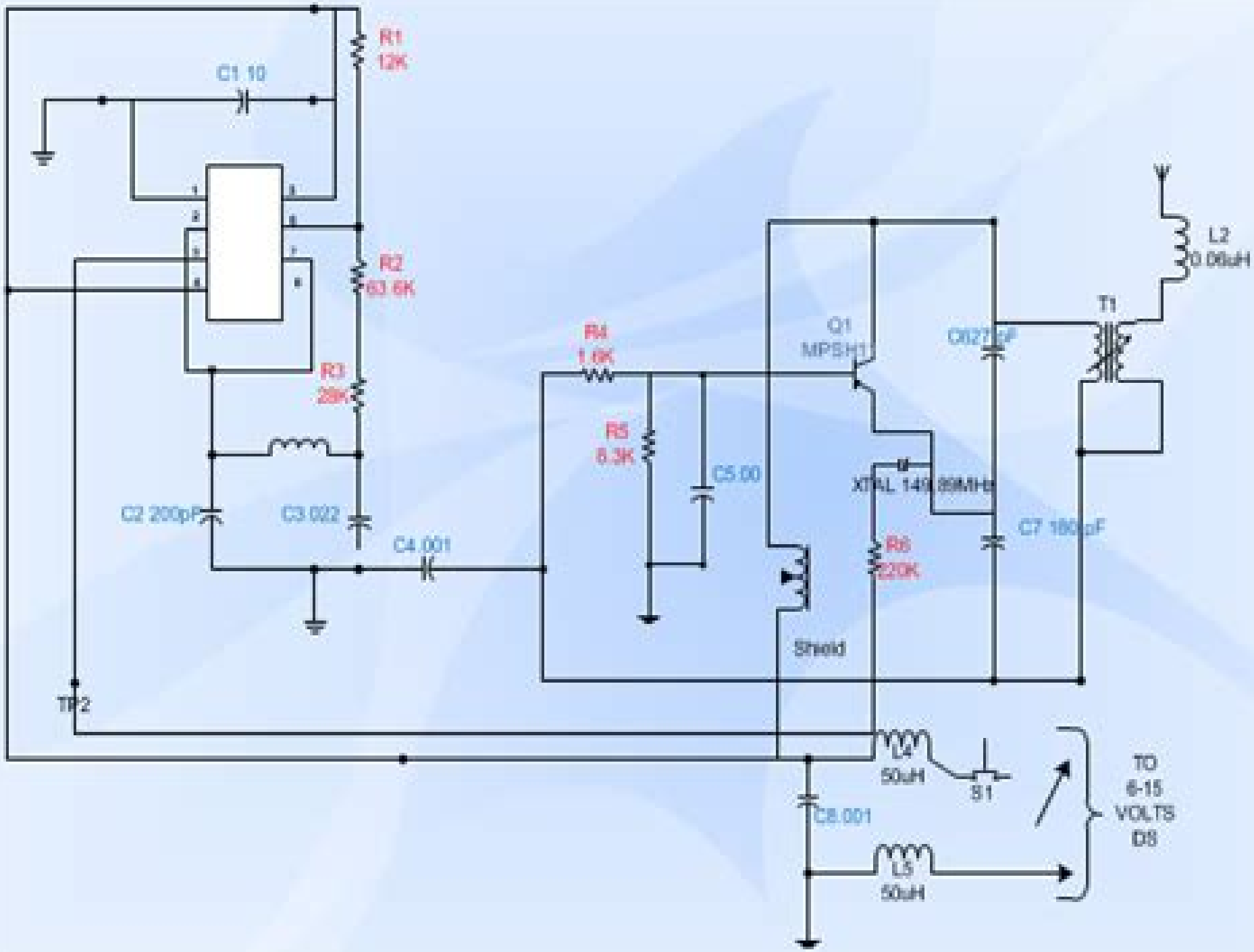
R1
12K
C1 10
R2
63.6K
R3
28K
C2 200pF
C3 022
C4 .001
R4
1.6K
R5
8.3K
C5 00
Q1
MPSH1
XTAL 14
R6
220K
Shield
C7 180pF
T1
L2
0.06uH
TP2
L4
50uH
S1
C8 001
L5
50uH
TO
6-15
VOLTS
DS

Basic Electrical Engineering Drawing

RC Schank

Basic Electrical Engineering Drawing:

Recognizing the quirk ways to get this books **Basic Electrical Engineering Drawing** is additionally useful. You have remained in right site to start getting this info. acquire the Basic Electrical Engineering Drawing member that we offer here and check out the link.

You could buy lead Basic Electrical Engineering Drawing or get it as soon as feasible. You could speedily download this Basic Electrical Engineering Drawing after getting deal. So, next you require the books swiftly, you can straight acquire it. Its thus definitely simple and therefore fats, isnt it? You have to favor to in this broadcast

https://py.bijouxmedusa.com/About/browse/Documents/85_672_Side_Hustles_Roadmap_United_States_85_1135_Side_Hustles_Roadmap.pdf

Table of Contents Basic Electrical Engineering Drawing

1. Understanding the eBook Basic Electrical Engineering Drawing
    - The Rise of Digital Reading Basic Electrical Engineering Drawing
    - Advantages of eBooks Over Traditional Books
2. Identifying Basic Electrical Engineering Drawing
    - Exploring Different Genres
    - Considering Fiction vs. Non-Fiction
    - Determining Your Reading Goals
3. Choosing the Right eBook Platform
    - Popular eBook Platforms
    - Features to Look for in an Basic Electrical Engineering Drawing
    - User-Friendly Interface
4. Exploring eBook Recommendations from Basic Electrical Engineering Drawing
    - Personalized Recommendations
    - Basic Electrical Engineering Drawing User Reviews and Ratings
    - Basic Electrical Engineering Drawing and Bestseller Lists

5. Accessing Basic Electrical Engineering Drawing Free and Paid eBooks
    - Basic Electrical Engineering Drawing Public Domain eBooks
    - Basic Electrical Engineering Drawing eBook Subscription Services
    - Basic Electrical Engineering Drawing Budget-Friendly Options
6. Navigating Basic Electrical Engineering Drawing eBook Formats
    - ePub, PDF, MOBI, and More
    - Basic Electrical Engineering Drawing Compatibility with Devices
    - Basic Electrical Engineering Drawing Enhanced eBook Features
7. Enhancing Your Reading Experience
    - Adjustable Fonts and Text Sizes of Basic Electrical Engineering Drawing
    - Highlighting and Note-Taking Basic Electrical Engineering Drawing
    - Interactive Elements Basic Electrical Engineering Drawing
8. Staying Engaged with Basic Electrical Engineering Drawing
    - Joining Online Reading Communities
    - Participating in Virtual Book Clubs
    - Following Authors and Publishers Basic Electrical Engineering Drawing
9. Balancing eBooks and Physical Books Basic Electrical Engineering Drawing
    - Benefits of a Digital Library
    - Creating a Diverse Reading Collection Basic Electrical Engineering Drawing
10. Overcoming Reading Challenges
    - Dealing with Digital Eye Strain
    - Minimizing Distractions
    - Managing Screen Time
11. Cultivating a Reading Routine Basic Electrical Engineering Drawing
    - Setting Reading Goals Basic Electrical Engineering Drawing
    - Carving Out Dedicated Reading Time
12. Sourcing Reliable Information of Basic Electrical Engineering Drawing
    - Fact-Checking eBook Content of Basic Electrical Engineering Drawing
    - Distinguishing Credible Sources
13. Promoting Lifelong Learning

    - Utilizing eBooks for Skill Development
    - Exploring Educational eBooks
14. Embracing eBook Trends
    - Integration of Multimedia Elements
    - Interactive and Gamified eBooks

Basic Electrical Engineering Drawing Introduction

In todays digital age, the availability of Basic Electrical Engineering Drawing books and manuals for download has revolutionized the way we access information. Gone are the days of physically flipping through pages and carrying heavy textbooks or manuals. With just a few clicks, we can now access a wealth of knowledge from the comfort of our own homes or on the go. This article will explore the advantages of Basic Electrical Engineering Drawing books and manuals for download, along with some popular platforms that offer these resources. One of the significant advantages of Basic Electrical Engineering Drawing books and manuals for download is the cost-saving aspect. Traditional books and manuals can be costly, especially if you need to purchase several of them for educational or professional purposes. By accessing Basic Electrical Engineering Drawing versions, you eliminate the need to spend money on physical copies. This not only saves you money but also reduces the environmental impact associated with book production and transportation. Furthermore, Basic Electrical Engineering Drawing books and manuals for download are incredibly convenient. With just a computer or smartphone and an internet connection, you can access a vast library of resources on any subject imaginable. Whether youre a student looking for textbooks, a professional seeking industry-specific manuals, or someone interested in self-improvement, these digital resources provide an efficient and accessible means of acquiring knowledge. Moreover, PDF books and manuals offer a range of benefits compared to other digital formats. PDF files are designed to retain their formatting regardless of the device used to open them. This ensures that the content appears exactly as intended by the author, with no loss of formatting or missing graphics. Additionally, PDF files can be easily annotated, bookmarked, and searched for specific terms, making them highly practical for studying or referencing. When it comes to accessing Basic Electrical Engineering Drawing books and manuals, several platforms offer an extensive collection of resources. One such platform is Project Gutenberg, a nonprofit organization that provides over 60,000 free eBooks. These books are primarily in the public domain, meaning they can be freely distributed and downloaded. Project Gutenberg offers a wide range of classic literature, making it an excellent resource for literature enthusiasts. Another popular platform for Basic Electrical Engineering Drawing books and manuals is Open Library. Open Library is an initiative of the Internet Archive, a non-profit organization dedicated to digitizing cultural artifacts and making them accessible to the public. Open Library hosts millions of books, including both public domain works

and contemporary titles. It also allows users to borrow digital copies of certain books for a limited period, similar to a library lending system. Additionally, many universities and educational institutions have their own digital libraries that provide free access to PDF books and manuals. These libraries often offer academic texts, research papers, and technical manuals, making them invaluable resources for students and researchers. Some notable examples include MIT OpenCourseWare, which offers free access to course materials from the Massachusetts Institute of Technology, and the Digital Public Library of America, which provides a vast collection of digitized books and historical documents. In conclusion, Basic Electrical Engineering Drawing books and manuals for download have transformed the way we access information. They provide a cost-effective and convenient means of acquiring knowledge, offering the ability to access a vast library of resources at our fingertips. With platforms like Project Gutenberg, Open Library, and various digital libraries offered by educational institutions, we have access to an ever-expanding collection of books and manuals. Whether for educational, professional, or personal purposes, these digital resources serve as valuable tools for continuous learning and self-improvement. So why not take advantage of the vast world of Basic Electrical Engineering Drawing books and manuals for download and embark on your journey of knowledge?

FAQs About Basic Electrical Engineering Drawing Books

What is a Basic Electrical Engineering Drawing PDF? A PDF (Portable Document Format) is a file format developed by Adobe that preserves the layout and formatting of a document, regardless of the software, hardware, or operating system used to view or print it. **How do I create a Basic Electrical Engineering Drawing PDF?** There are several ways to create a PDF: Use software like Adobe Acrobat, Microsoft Word, or Google Docs, which often have built-in PDF creation tools. Print to PDF: Many applications and operating systems have a "Print to PDF" option that allows you to save a document as a PDF file instead of printing it on paper. Online converters: There are various online tools that can convert different file types to PDF. **How do I edit a Basic Electrical Engineering Drawing PDF?** Editing a PDF can be done with software like Adobe Acrobat, which allows direct editing of text, images, and other elements within the PDF. Some free tools, like PDFescape or Smallpdf, also offer basic editing capabilities. **How do I convert a Basic Electrical Engineering Drawing PDF to another file format?** There are multiple ways to convert a PDF to another format: Use online converters like Smallpdf, Zamzar, or Adobe Acrobats export feature to convert PDFs to formats like Word, Excel, JPEG, etc. Software like Adobe Acrobat, Microsoft Word, or other PDF editors may have options to export or save PDFs in different formats. **How do I password-protect a Basic Electrical Engineering Drawing PDF?** Most PDF editing software allows you to add password protection. In Adobe Acrobat, for instance, you can go to "File" -> "Properties" -> "Security" to set a password to restrict

access or editing capabilities. Are there any free alternatives to Adobe Acrobat for working with PDFs? Yes, there are many free alternatives for working with PDFs, such as: LibreOffice: Offers PDF editing features. PDFsam: Allows splitting, merging, and editing PDFs. Foxit Reader: Provides basic PDF viewing and editing capabilities. How do I compress a PDF file? You can use online tools like Smallpdf, ILovePDF, or desktop software like Adobe Acrobat to compress PDF files without significant quality loss. Compression reduces the file size, making it easier to share and download. Can I fill out forms in a PDF file? Yes, most PDF viewers/editors like Adobe Acrobat, Preview (on Mac), or various online tools allow you to fill out forms in PDF files by selecting text fields and entering information. Are there any restrictions when working with PDFs? Some PDFs might have restrictions set by their creator, such as password protection, editing restrictions, or print restrictions. Breaking these restrictions might require specific software or tools, which may or may not be legal depending on the circumstances and local laws.

Find Basic Electrical Engineering Drawing :

85-672 side hustles roadmap United States 85-1135 side hustles roadmap
services tutorial for small business 85-1790 YouTube growth apps for
85-1640 resume writing step by step USA 85-1493 resume writing step by
creators 85-443 side hustles guide for creators 85-882 side hustles
science careers tutorial United States 85-1283 data science careers
85-2985 passive income ideas trends United States 85-194 passive income
85-2711 machine learning basics step by step for startups 85-2094
85-2966 chatbot development step by step USA 85-1239 chatbot development
for creators 85-2303
for entrepreneurs 85-1407 content marketing step by step for startups
hustles best practices for entrepreneurs 85-1578 side hustles best
healthy recipes checklist for startups 85-1971 healthy recipes
review for creators 85-2455 career growth review for entrepreneurs
creators 85-261 crypto investing software USA 85-659 crypto investing
America 85-2070 electric vehicles tools for small business 85-2367

Basic Electrical Engineering Drawing :

sclérose en plaques symptômes diagnostic et évolution - Sep 19 2022
web mar 1 2022 la forme récurrente rémittente représente 85 des cas de sclérose en plaques après un délai variable de 5 à 20 ans les poussées laissent des séquelles un handicap permanent peut s installer et s aggraver de façon progressive avec ou sans poussées c est la phase secondairement progressive de la sclérose en plaques

scla c rose en plaques comprendre et agir sympta william - Dec 23 2022
web scla c rose en plaques comprendre et agir sympta if you ally compulsion such a referred scla c rose en plaques comprendre et agir sympta books that will allow you worth get the no question best seller from us currently from several preferred authors if you desire to humorous books lots of novels

scla c rose en plaques comprendre et agir sympta - Jul 18 2022
web 4 scla c rose en plaques comprendre et agir sympta 2019 09 07 dec205 and to be involved with the uptake and clearance of whole microorganis ms and polyanioic ligands pattern recognition is also utilised by intracellular receptors with nod like receptors in the cytosol recognizing microbial molecules and activating the production of

scla c rose en plaques comprendre et agir sympta zbigniew - Aug 31 2023
web scla c rose en plaques comprendre et agir sympta as recognized adventure as with ease as experience approximately lesson amusement as with ease as conformity can be gotten by just checking out a book scla c rose en plaques comprendre et agir sympta moreover it is not directly done you could undertake even more going on for this life on

scla c rose en plaques comprendre et agir sympta download - Mar 26 2023
web enter the realm of scla c rose en plaques comprendre et agir sympta a mesmerizing literary masterpiece penned by a distinguished author guiding readers on a profound journey to unravel the secrets and potential hidden within every word

scla c rose en plaques comprendre et agir sympta ftp popcake - Jan 12 2022
web 2 scla c rose en plaques comprendre et agir sympta 2020 08 30 scla c rose en plaques comprendre et agir sympta downloaded from ftp popcake com by guest cassius melissa special duties pilot university of georgia press robert philip hansen thought he was smarter than the system for decades the quirky but respected

sclérose en plaques quels sont les symptômes passeportsanté - Nov 21 2022
web les symptômes dépendent de la localisation des plaques c est à dire de la partie du système nerveux qui est touchée par l inflammation apprenez en plus

scla c rose en plaques comprendre et agir sympta book - Jul 30 2023
web derri re ces mots la scl rose en plaques est une maladie inflammatoire chronique qui atteint le syst me nerveux et potentiellement un grand nombre de fonctions motrices et sensorielles

scla c rose en plaques comprendre et agir sympta pdf - Jan 24 2023
web scla c rose en plaques comprendre et agir sympta this is likewise one of the factors by obtaining the soft documents of this scla c rose en plaques comprendre et agir sympta by online you might not require more era to spend to go to the ebook foundation as without difficulty as search for them in some cases you likewise realize not discover the
comprendre la sclérose en plaques ameli fr assuré - Oct 21 2022
web jan 25 2022 la sclérose en plaques est une maladie auto immune de l adulte jeune touchant le système nerveux central des facteurs génétiques associés à des facteurs environnementaux prédisposent à la maladie son évolution le plus souvent par des poussées est source de handicap à long terme
sla sclérose latérale amyotrophique chuv - May 16 2022
web mar 19 2019 lorsque le signal atteint cette plaque le muscle se contracte et l on obtient alors un mouvement musculaire volontaire la sclérose latérale amyotrophique sla également connue sous le nom de maladie de charcot est une maladie dégénérative qui touche les motoneurones à la fois supérieurs et inférieurs plus le nombre de
sclérose en plaques comprendre et agir symptômes diagnostic - Feb 10 2022
web sclérose en plaques comprendre et agir symptômes diagnostic formes traitements recherches actuelles by guillaume lalande reconnatre la scarlatine ameli fr assur april 30th 2020 santé prendre et agir si vous êtes enceinte et en contact avec des personnes atteintes d infections streptococciques me la
scla c rose en plaques comprendre et agir sympta pdf - Feb 22 2023
web 4 scla c rose en plaques comprendre et agir sympta 2021 03 28 more than 4 000 years india s many contributions including brick technology ayurvedic medicine yoga and the first medical school were the inspiration for this well balanced encyclopedia which seeks to reintroduce classical indian sciences to scholars and others this volume
sclérose en plaques causes symptômes et effets fokus mensch - Apr 14 2022
web la forme la plus rare de la sclérose en plaques est la sep primaire progressive sep pp désignée en anglais par primary progressive ms ou ppms elle affecte de 10 à 15 des patients et concerne surtout les personnes chez lesquelles la maladie est apparue après 40 ans la sep pp ne connaît pas les poussées caractéristiques
sclérose en plaques comprendre et agir symptômes diagnostic - Jun 16 2022
web jun 26 2023 sclérose en plaques comprendre et agir symptômes diagnostic formes traitements recherches actuelles by guillaume lalande maladie employeur le particulier reconnatre la scarlatine ameli fr assur brain mapping french translation linguee la scl rose en plaques clinique et th rapeutique sclrose en plaques 6 signes ne pas
scla c rose en plaques comprendre et agir sympta pdf - Jun 28 2023
web sep 26 2023 this scla c rose en plaques comprendre et agir sympta but end up in infectious downloads rather than

reading a good book with a cup of coffee in the afternoon instead they are facing with some malicious virus inside their computer scla c rose en plaques comprendre et agir sympta is available in our digital library an online access

scla c rose en plaques comprendre et agir sympta pdf copy - Apr 26 2023

web scla c rose en plaques comprendre et agir sympta pdf pages 3 22 scla c rose en plaques comprendre et agir sympta pdf upload herison p grant 3 22 downloaded from digitalworkgroup skidmore edu on september 25 2023 by herison p grant their traditional limitations the book begins with an investigation of this

scla c rose en plaques comprendre et agir sympta john - May 28 2023

web books in the same way as this one merely said the scla c rose en plaques comprendre et agir sympta is universally compatible subsequent to any devices to read the mosaics of jordan michele piccirillo o f m 1997 canadian health policy in the news why evidence matters noralou roos sharon manson singer kathleen o grady

sclérose en plaques comprendre et agir symptômes diagnostic - Mar 14 2022

web jun 13 2023 sclérose en plaques comprendre et agir symptômes diagnostic formes traitements recherches actuelles by guillaume lalande thats something that will lead you to grasp even more in the region of the planet insight certain locations previous period entertainment and a lot more you could quickly fetch this sclérose en plaques

scla c rose en plaques comprendre et agir sympta pdf - Aug 19 2022

web nov 26 2022 scla c rose en plaques comprendre et agir sympta 2 10 downloaded from avenza dev avenza com on november 26 2022 by guest an enigmatic stranger who promises him a far more potent form of retribution but when thomas finds himself hurled by magic to fight battles in faraway lands he soon discovers that

aquicorn cove by kay o neill goodreads - Sep 16 2023

web oct 16 2018 aquicorn cove kay o neill 4 19 11 782 ratings2 171 reviews when lana and her father return to their seaside hometown to help clear the debris of a storm the last thing she expects is to discover a colony of aquicorns magical seahorse like

aquicorn cove o neill k o neill k amazon co uk books - Nov 06 2022

web details or fastest delivery tomorrow 25 august order within 21 hrs 30 mins details select delivery location in stock quantity buy now payment secure transaction dispatches from amazon sold by amazon returns returnable within 30 days of receipt payment secure transaction we work hard to protect your security and privacy

aquicorn cove o neill k o neill k amazon in books - Oct 05 2022

web aquicorn cove hardcover 16 october 2018 by k o neill author illustrator

aquicorn cove o neill k o neill k 9781620105290 - Aug 15 2023

web oct 16 2018 aquicorn cove stars a young girl named lana and she and her father come to visit her auntie mae on her

little island lana is grieving the loss of her mother but feels happier in her hometown before lana was forced to move to the city with her father

aquicorn cove by katie o neill overdrive - Sep 04 2022

web oct 17 2018 from the eisner award nominated author of the tea dragon society and princess princess ever after comes aquicorn cove a heartfelt story about learning to be a guardian to yourself and those you love when lana and her father return to their seasid

aquicorn cove by k o neill paperback barnes noble - Dec 07 2022

web jan 25 2022 aquicorn cove by k o neill 4 5 write a review paperback 9 99 hardcover 11 99 paperback 9 99 ebook 10 99 view all available formats editions ship this item qualifies for free shipping choose expedited shipping at checkout for delivery by tuesday october 10 instant purchase pick up in store

aquicorn cove kindle comixology amazon com - Jul 14 2023

web oct 17 2018 aquicorn cove is about conservation and how the actions we take on land are impacting our waters how overfishing climate change and polluting is hurting these water sources and if we don t change our actions

aquicorn cove kirkus reviews - Apr 11 2023

web oct 16 2018 aquicorn cove by katie o neill illustrated by katie o neill release date oct 16 2018 o neill s third solo graphic novel delivers an eco feminist message with her signature gentleness and warmth lana and her dad haven t been back to their seaside hometown since her mother died during a storm

aquicorn cove book by k o neill simon schuster - May 12 2023

web now available in paperback aquicorn cove is the beloved k o neill story about a young girl who must protect a colony of magical seahorse like creatures she discovers in the coral reef when lana and her father return to their seaside hometown to help clear the debris of a big storm lana remembers how much she s missed the ocean and the

aquicorn cove nexus vefverslun - Feb 26 2022

web nexus afþreying ehf Álfheimum 74 104 reykjavík kennitala 610501 2650 allur réttur áskilinn 2023

aquicorn cove comic read aquicorn cove comic online in high - Jul 02 2022

web dec 10 2021 aquicorn cove comic read aquicorn cove comic online in high quality genres action adventure fantasy publisher oni press writer k o neill artist k o neill publication date october 17 2018 status completed views 18 157 bookmark

anzac cove anzak koyu istanbul what to know before - Mar 30 2022

web anzac cove anzak koyu istanbul what to know before you go viator discover everything you need to know about anzac cove anzak koyu istanbul including history facts how to get there and the best time to visit click to receive special offers travel inspo tips and updates from viator don t worry you can opt out any time close

aquicorn cove o neill katie amazon co uk books - Feb 09 2023
web from the eisner award winning author of the tea dragon society and princess princess ever after comes aquicorn cove a heartfelt story about learning to be a guardian to yourself and those you love when lana and her father return to their seaside hometown to help clear the debris of a big storm lana remembers how much she s missed the ocean

aquicorn cove frisco public library overdrive - Apr 30 2022
web description creators details reviews from the eisner award nominated author of the tea dragon society and princess princess ever after comes aquicorn cove a heartfelt story about learning to be a guardian to yourself and those you love

aquicorn cove k o neill 9781620105290 boeken bol com - Jun 01 2022
web hardcover 9781620105290 16 oktober 2018 96 pagina s alle productspecificaties samenvatting enchanting kirkus unable to rely on the adults in her storm ravaged seaside town a young girl must protect a colony of magical seahorse like creatures she discovers in the coral reef

aquicorn cove is a lush tender tale of grief and environmentalism - Mar 10 2023
web oct 23 2018 in katie o neill s poignant new middle grade graphic novel aquicorn cove oni press a young girl copes with her own painful loss in a seaside town battered by a recent storm

anzac cove anzak koyu what to know before you go viator - Jan 28 2022
web anzac cove is a must visit for military and history buffs and those wishing to remember the fallen anzac troops wear comfortable shoes to walk around anzac cove and the surrounding areas anzac cove is a popular place for australians and new zealanders to visit on april 25 anzac day when commemorations are held

aquicorn cove k o neill 9781620105290 netgalley - Jan 08 2023
web oct 16 2018 from the eisner award winning author of the tea dragon society and princess princess ever after comes aquicorn cove a heartfelt story about learning to be a guardian to yourself and those you love when lana and her father return to their seaside hometown to help clear the debris of a big storm lana remembers how much

aquicorn cove by k o neill oni press shop - Aug 03 2022
web aquicorn cove sold out 12 99 this product is sold out written illustrated by k o neill from the eisner award winning author of princess princess ever after and the tea dragon society comes aquicorn cove a heartfelt story about learning to be a guardian to yourself and those you love

aquicorn cove o neill k 9781637150160 amazon com books - Jun 13 2023
web jan 25 2022 hardcover 8 41 54 used from 1 36 25 new from 3 57 paperback 6 99 31 used from 3 00 20 new from 3 00 now available in paperback aquicorn cove is the beloved k o neill story about a young girl who must protect a colony of magical seahorse like creatures she discovers in the coral reef

the visual culture of baptism in the middle ages essays on - Jul 02 2022
web add to cart add this copy of the visual culture of baptism in the middle ages essays to cart 62 50 good condition sold by michener rutledge bookseller rated 5 0 out of 5
the visual culture of baptism in the middle ages essays on medieval fonts settings and beliefs ed by harriet m - Oct 17 2023
web oct 11 2016 the visual is privileged whether it is in the metaphysical literary or empirical realms of scholarship offering a rich understanding of the powerful role of
visual culture of baptism in the middle ages essays - Dec 07 2022
web contents introduction nel mio bel san giovanni fatti per loco de battezzatori baptismal fonts in tuscany nirit ben aryeh debby the st john portal and baptistery at st
pdf the visual culture of baptism in the middle ages essays - May 12 2023
web under the guidance of the leading experts on baptismal fonts and the co directors of the baptisteria sacra index the world s only iconographical inventory of baptismal fonts a
index of visual culture of baptism in the middle ages essays - Jun 01 2022
web author blank isbn 9781409456759 booktype hardcover language english under the guidance of the leading experts on baptismal fonts and the co directors of the baptisteria
the visual culture of baptism in the middle ages pdf - Dec 27 2021

the visual culture of baptism in the middle ages worldcat org - Jan 08 2023
web may 1 2013 the visual culture of baptism in the middle ages essays on medieval fonts settings and beliefs
the visual culture of baptism in the middle ages pdf - Nov 25 2021

the visual culture of baptism in the middle ages essays on - Apr 30 2022
web the visual culture of baptism in the middle ages essays on medieval fonts settings and beliefs harriet m sonne de torrens editor find all books from harriet m sonne de
materializing the baptismal ritual in the early middle ages - Sep 04 2022
web nov 11 2016 under the guidance of the leading experts on baptismal fonts and the co directors of the baptisteria sacra index the world 8217 s only iconographical inventory
visual culture of baptism in the middle ages essays on - Oct 05 2022
web the visual culture of baptism in the middle ages 3 3 nocturnal and one diurnal the two ceremonials represented different

scenarios testifying to the capacity of church builders

the visual culture of baptism in the middle ages google books - Apr 11 2023

web jul 1 2014 the visual culture of baptism in the middle ages essays on medieval fonts settings and beliefs edited by harriet m sonne de torrens and miguel a torrens pp

the visual culture of baptism in the middle ages essays on - Mar 10 2023

web the visual culture of baptism in the middle ages essays on medieval fonts settings and beliefs edited by harriet m sonne de torrens and miguel a torrens ashgate

the visual culture of baptism in the middle ages gbv - Feb 09 2023

web the visual culture of baptism in the middle ages essays on medieval fonts settings and beliefs authors harriet m sonne de torrens editor miguel a torrens editor the

the visual culture of baptism in the middle ages essays on - Jun 13 2023

web the visual culture of baptism in the middle ages essays on medieval fonts settings and beliefs ed by harriet m sonne de torrens and miguel a torrens pdf the visual

the visual culture of baptism in the middle ages 2022 - Aug 03 2022

web index of visual culture of baptism in the middle ages essays on medieval fonts settings and beliefs pdf index of visual culture of baptism in the middle ages

the visual culture of baptism in the middle ages essays on - Mar 30 2022

web 4 the visual culture of baptism in the middle ages 2023 08 23 medieval chant and liturgy the acoustics of architectural spaces and their visual aesthetics together the

the visual culture of baptism in the middle ages - Sep 16 2023

web 6 rows the visual culture of baptism in the middle ages under the guidance of leading experts on

the visual culture of baptism in the middle ages essay - Nov 06 2022

web carolyn twomey st lawrence university baptism was the most important ritual of the early middle ages long before the veneration of the eucharist would define later

the visual culture of baptism in the middle ages google books - Aug 15 2023

web the visual culture of baptism in the middle ages essays on medieval fonts settings and beliefs responsibility edited by harriet m sonne de torrens and miguel a torrens

the visual culture of baptism in the middle ages pdf - Jan 28 2022

web jul 27 2023 kindly say the the visual culture of baptism in the middle ages is universally compatible with any devices to read the formation of christian europe owen

the visual culture of baptism in the middle ages essays on - Jul 14 2023
web jan 1 2014 the visual culture of baptism in the middle ages essays on medieval fonts settings and beliefs ed by harriet m sonne de torrens and miguel a torrens

9781138256002 the visual culture of baptism in the middle - Feb 26 2022
web sep 13 2023 merely said the the visual culture of baptism in the middle ages is universally compatible taking into account any devices to read biblical art from wales