Figure.01: Smart Home Automation System using Arduino

Zoom in the image to read all the details

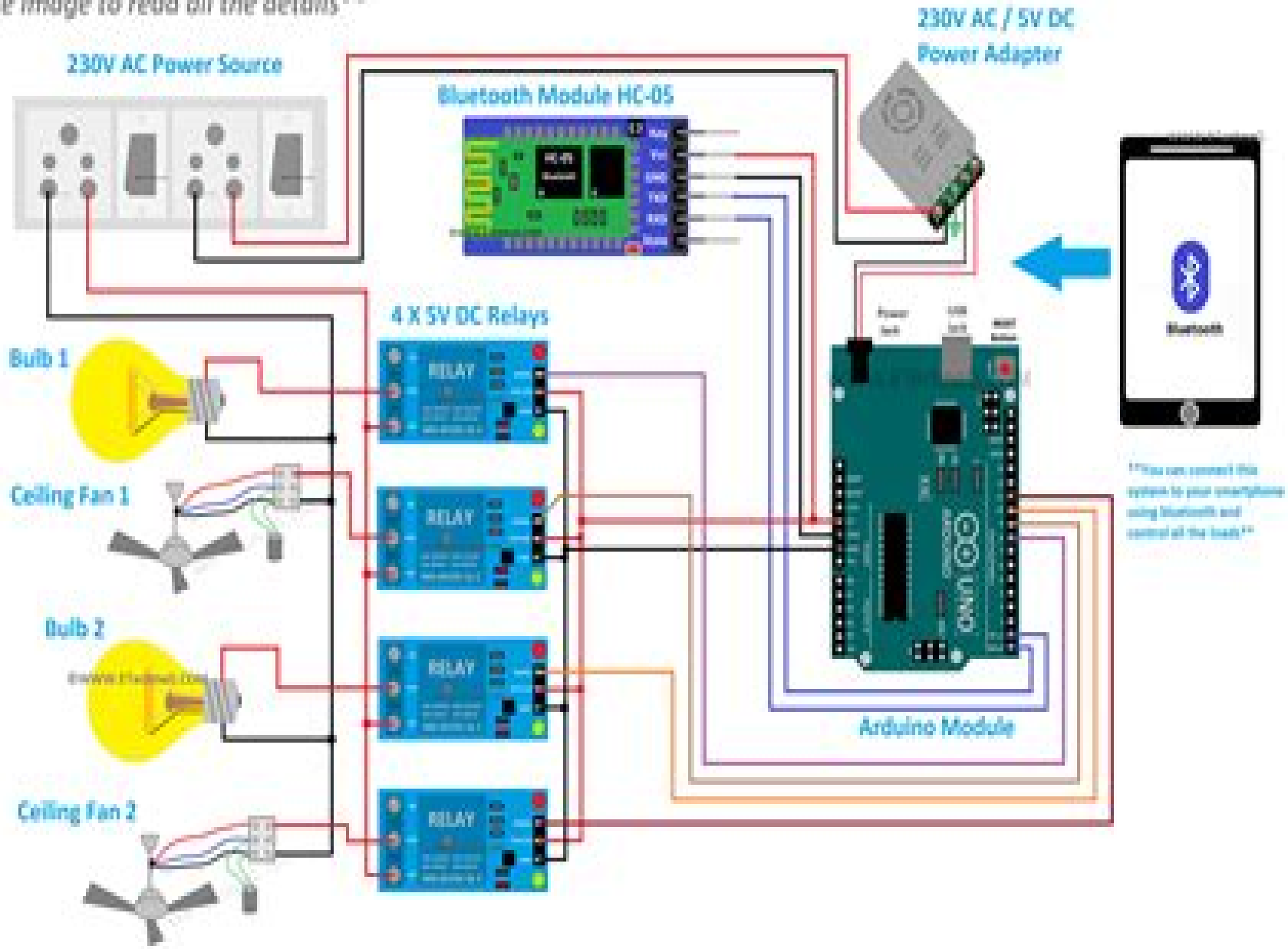

Bluetooth Based Home Automation And Security System Using Arm9

Didier Musso

Bluetooth Based Home Automation And Security System Using Arm9:

Handbook of Research on the IoT, Cloud Computing, and Wireless Network Optimization Singh, Surjit,Mohan Sharma, Rajeev,2019-03-29 ICT technologies have contributed to the advances in wireless systems which provide seamless connectivity for worldwide communication The growth of interconnected devices and the need to store manage and process the data from them has led to increased research on the intersection of the internet of things and cloud computing The Handbook of Research on the IoT Cloud Computing and Wireless Network Optimization is a pivotal reference source that provides the latest research findings and solutions for the design and augmentation of wireless systems and cloud computing The content within this publication examines data mining machine learning and software engineering and is designed for IT specialists software engineers researchers academicians industry professionals and students Wearable/Personal Monitoring Devices Present to Future Gaetano D. Gargiulo,Ganesh R. Naik,2021-10-26 This book discusses recent advances in wearable technologies and personal monitoring devices covering topics such as skin contact based wearables electrodes non contact wearables the Internet of things IoT and signal processing for wearable devices Although it chiefly focuses on wearable devices and provides comprehensive descriptions of all the core principles of personal monitoring devices the book also features a section on devices that are embedded in smart appliances furniture e g chairs which despite their limitations have taken the concept of unobtrusiveness to the next level Wearable and personal devices are the key to precision medicine and the medical community is finally exploring the opportunities offered by long term monitoring of physiological parameters that are collected during day to day life without the bias imposed by the clinical environment Such data offers a prime view of individuals physical condition as well as the efficacy of therapy and occurrence of events Offering an in depth analysis of the latest advances in smart and pervasive wearable devices particularly those that are unobtrusive and invisible and addressing topics not covered elsewhere the book will appeal to medical practitioners and engineers alike Intelligent Communication, Control and Devices Rajesh Singh,Sushabhan Choudhury,Anita Gehlot,2018-04-10 The book focuses on the integration of intelligent communication systems control systems and devices related to all aspects of engineering and sciences It contains high quality research papers presented at the 2nd international conference ICICCD 2017 organized by the Department of Electronics Instrumentation and Control Engineering of University of Petroleum and Energy Studies Dehradun on 15 and 16 April 2017 The volume broadly covers recent advances of intelligent communication intelligent control and intelligent devices The work presented in this book is original research work findings and practical development experiences of researchers academicians scientists and industrial practitioners **Research Anthology on Cross-Disciplinary Designs and Applications of Automation** Management Association, Information Resources,2021-10-29 Throughout human history technological advancements have been made for the ease of human labor With our most recent advancements it has been the work of scholars to discover ways for machines to take over a large part

of this labor and reduce human intervention These advancements may become essential processes to nearly every industry It is essential to be knowledgeable about automation so that it may be applied Research Anthology on Cross Disciplinary Designs and Applications of Automation is a comprehensive resource on the emerging designs and application of automation This collection features a number of authors spanning multiple disciplines such as home automation healthcare automation government automation and more Covering topics such as human machine interaction trust calibration and sensors this research anthology is an excellent resource for technologists IT specialists computer engineers systems and software engineers manufacturers engineers government officials professors students healthcare administration managers CEOs researchers and academicians **Emerging Trends in Electrical, Communications, and Information Technologies** T. Hitendra Sarma,V. Sankar,Rafi Ahamed Shaik,2019-09-24 This book includes original peer reviewed research from the 3rd International Conference on Emerging Trends in Electrical Communication and Information Technologies ICECIT 2018 held at Srinivasa Ramanujan Institute of Technology Ananthapuramu Andhra Pradesh India in December 2018 It covers the latest research trends and developments in the areas of Electrical Engineering Electronic and Communication Engineering and Computer Science and Information **Metaheuristic and Machine Learning Optimization Strategies for Complex Systems** R., Thanigaivelan,M., Suchithra,S., Kaliappan,Mothilal, T.,2024-07-17 In contemporary engineering domains optimization and decision making issues are crucial Given the vast amounts of available data processing times and memory usage can be substantial Developing and implementing novel heuristic algorithms is time consuming yet even minor improvements in solutions can significantly reduce computational costs In such scenarios the creation of heuristics and metaheuristic algorithms has proven advantageous The convergence of machine learning and metaheuristic algorithms offers a promising approach to address these challenges Metaheuristic and Machine Learning Optimization Strategies for Complex Systems covers all areas of comprehensive information about hyper heuristic models hybrid meta heuristic models nature inspired computing models and meta heuristic models The key contribution of this book is the construction of a hyper heuristic approach for any general problem domain from a meta heuristic algorithm Covering topics such as cloud computing internet of things and performance evaluation this book is an essential resource for researchers postgraduate students educators data scientists machine learning engineers software developers and engineers policy makers and more

Information and Communication Technology Durgesh Kumar Mishra,Ahmad Taher Azar,Amit Joshi,2017-10-12 This book volume contains 31 papers presented at ICICT 2016 Second International Congress on Information and Communication Technology The conference was held during 12 13 December 2016 Bangkok Thailand and organized communally by G R Foundation and Computer Society of India Division IV Communication and Division V Education and Research This volume contains papers mainly focused on ICT for computation algorithms and data analytics and IT security **Integrated Green Energy Solutions, Volume 1** Milind Shrinivas Dangate,W. S. Sampath,O. V. Gnana Swathika,Sanjeevikumar

Padmanaban,2023-05-12 INTEGRATED GREEN ENERGY SOLUTIONS This first volume in a two volume set presents the state of the art for the concepts practical applications and future of renewable energy and how to move closer to true sustainability Renewable energy supplies are of ever increasing environmental and economic importance in every country worldwide A wide range of renewable energy technologies has been established commercially and recognized as an important set of growth industries for most governments World agencies including the United Nations have extensive programs to encourage these emerging technologies This book will bridge the gap between descriptive reviews and specialized engineering technologies It centers on demonstrating how fundamental physical processes govern renewable energy resources and their applications Although the applications are updated continually the fundamental principles remain the same and this book will provide a useful platform for those advancing the subject and its industries Integrated Resilient Energy Solutions is a two volume set covering subjects of proven technical and economic importance worldwide Energy supply from renewables is an essential component of every nation s strategy especially when there is responsibility for the environment and sustainability These two volumes will consider the timeless renewable energy technologies principles yet demonstrate modern applications and case studies Whether for the veteran engineer student or other professional these two volumes are a must have for any library *Home Automation Via Bluetooth Using the Arduino Uno Microcontroller* Ayush Kumar,2016 Abstract Home automation systems have gained popularity in recent years paralleling the advances in the concept of the Internet of Things The current project presents the implementation of an inexpensive home automation system within the framework of assistive technology The system implementation is based on the Arduino microcontroller with Bluetooth communications capability and it is designed for use by the elderly and people with disabilities The system is user friendly with an intuitive interface implemented on an Android based smart phone Demonstrations show that the system facilitates control of home appliances lights heating cooling systems and security devices by the intended users i e the elderly and the disabled *BLUETOOTH BASED HOME AUTOMATION SYSTEM* OMER FAROOQ (TP016040),2012 **Building Smart Home Automation Solutions with Home Assistant** Marco Carvalho,2023-09-15 A step by step guide to building cost effective and complete home automation DIY projects using tools such as Home Assistant Raspberry Pi IoT devices the Tasmota sensor ESP32 and Grafana Key Features Learn by doing using real life practical examples to build your own home automation system Create hack and configure IoT devices through hands on projects to be used with or without Home Assistant Customize your home automation system using Home Assistant Node RED InfluxDB and Grafana Purchase of the print or Kindle book includes a free PDF eBook Book DescriptionPicture a home where you can adjust the lighting based on the time of day or when movement is detected In this same home you can also detect when a door is unexpectedly opened or an alarm is triggered in response to any suspicious activity Such automated devices form part of a smart home and the exciting part is that this book teaches you how to create and manage these devices all by yourself This book helps you create

your own ecosystem to automate your home using Home Assistant software You ll begin by understanding the components of a home automation system and learn how to create hack and configure them to operate seamlessly Then you ll set up Home Assistant on a Raspberry Pi to work as a home automation server build your own IoT sensors based on ESP32 ESP8266 and set up real life automation use cases using hands on examples and projects The chapters will also guide you in using software tools such as Node RED InfluxDB and Grafana to manage present and use data collected from your Home Automation devices Finally you ll gain insights into new technologies and trends in the home automation space to help you continue with your learning journey By the end of this book you ll be able to build your own creative IoT based home automation system using different hardware and software technologies What you will learn Understand the fundamental concepts of home automation systems Set up a home automation system using Home Assistant and Raspberry Pi Create and configure ESP8266 based sensors to work with Home Assistant Hack a commercial actuator to work with Home Assistant using Tasmota Create automations customize and use applications with Home Assistant Leverage IoT software tools to take your home automation to the next level Work on hands on projects including LED strip lights and an ESP32 five zone temperature logger Explore home automation FAQs emerging technologies and trends Who this book is for The book is for engineers developers students makers and enthusiasts who re working on or interested in working with electronics and IoT devices embedded systems systems integration computer software and coding to develop their own smart home automation systems Technicians teachers and other professionals who want to learn home automation related technologies will also find this book useful Prior experience of working with Raspberry Pi creating hardware prototypes and software programming will be beneficial

Home Automation Lisa Montgomery, Editor, Electronic House Magazine,2014-09-12 Smart home automated home connected home or intelligent home Whatever you call it a home that s able to take the drudgery out of common everyday tasks is something that every family can appreciate In this inaugural book about home automation you ll learn how to incorporate the right types of products and systems into your house to achieve a new level of comfort convenience safety and efficiency The book walks you step by step through the process of automating your home and because automation systems are able to control just about anything electronic you can imagine we ve provided plenty of practical ideas In 10 Key Features of a Home Automation System and Automation Ideas for Every System of Your House you ll gather more than enough recommendations to get started in your automation endeavor No matter how many great ideas you gather from our Home Automation book though it s important that the system you buy today incorporates the most recent iterations of control technologies We ve followed the automation trends put them into perspective and offer advice on the critical new updates upgrades and upstarts you ll want to look into when selecting a system In addition to deciding what you want your automation system to do you ll want to determine whether you d like to install the system yourself or hire a professional to handle the task Both methods offer their own unique set of advantages and disadvantages so be sure to read DIY or

Professionally Installed before making your decision You ll also want to check out our comprehensive directory of home automation manufacturers before taking the plunge Finally we finish the book with a series of finished automation installations which range from a basic starter package in a condo to a full blown bells and whistles system for a bigger house You ll see what types of features that owners of these homes chose to incorporate and hear how automation is truly making a difference in their lives The technology has been so carefully designed and meticulously installed that you may not even notice it in the full color photography of many of the rooms where lights motorized window shades and A V equipment have been automated to dim brighten turn on and off open and close and adjust and reset based on the time of day occupancy or the single touch of a button Arduino Bluetooth Based Home Automation Mehmet AVCU,2021-01-05 Arduino Bluetooth Based Home Automation **Arduino Home Automation Projects** Marco Schwartz,2014-07-23 This book is divided into projects that are explained in a step by step format with practical instructions that are easy to follow If you want to build your own home automation systems wirelessly using the Arduino platform this is the book for you You will need to have some basic experience in Arduino and general programming languages such as C and C to understand the projects in this book *Building a Home Security System with BeagleBone* Bill Pretty,2013-12-17 Building a Home Security System with BeagleBone is a practical hands on guide for practical hands on people The book includes step by step instructions for assembling your own hardware on professionally manufactured PCB s and setting up the software on your system This book is for anyone who is interested in alarm systems and how they work for hobbyists and basement tinkerers who love to build things If you want to build the hardware described in this book you will need some basic soldering skills but all the parts are of the thru hole variety and are very easy to put together When it comes to software you can just run it as is but if you want to modify the code you will need knowledge of Java and IDEs Essential Guide to Smart Home Automation Safety and Security Gerard O'Driscoll,2015-03-02 This book addresses readers who wish to gain an in depth understanding of Smart Home alarm and safety systems Detail is provided on six key smart systems that you can use to enhance your family s home security levels namely smart alarm systems Smart IP cameras Smart combo alarm devices smart access control smart locks and smart doorbells In addition to covering the integration of alarm and fire detection systems with your smartphone App this chapter also deals with adding smart air quality control water and freeze alert capabilities to your home This mini ebook includes technical illustrations examples of how smart homes are helping people insights from Gerard and details of an awesome monthly giveaway *Home Security System DIY Wireless IoT Using ESP32 CAM and Android* Robert Chin,2022-08-07 This book shows you how you can save tons of money by building your own low cost maximum privacy and maximum security professional quality wireless home security system from common off the shelf parts You can monitor the home security system using your existing Android cell phone and existing home internet connection You will save lots of money on the home security system hardware itself as well as enjoy free email alert notifications and or low cost cell phone

text message alert notifications depending on the monitoring options you choose Easy to understand step by step instructions will be given so that the average non technical person will be able to assemble and operate this home security system The main components of the security system are the ESP32 CAM a motion sensor an Android cell phone and a home internet connection In addition custom software created by the author will be provided for the ESP32 and Android devices Security System Main Features Live Real Time Local Video Monitoring using multiple ESP32 CAM units Free Email Notifications With Images Using Your Existing Home Internet Connection Low Cost Text Message Notifications Using Your Android Cell Phone Easy Hardware Assembly and Simple Software Setup Procedure Use your existing Android cell phone to control and monitor your alarm system Modular sensor system allows you to add up to 11 ESP32 CAM units with motion sensors to the security system Maximum Security and Privacy Security System Basic Operation 1 Set up your security system for operation using your Controller cell phone 2 Activate the security system using your Controller cell phone 3 Receive emergency text alerts on your personal cell phone if the alarm has been tripped 4 Receive emergency emails with images of people that have tripped the sensors in or outside of your home to an email address you designate 5 If an intruder or other emergency is confirmed then call the police as needed Wireless Based Home Security with Automation System Wan Norziela Wan Rosli,2010 The aim of the project is to design a wireless based home security with automation system The system uses wireless technology to revolutionize the standards of living which could give assurance for user to protect their homes from burglars thieves and criminals This project is so versatile and is equipped with various sensors such as passive infrared sensor magnetic switch sensor and vibration sensor to detect different forms of intrusion A microcontroller is used to control the system operation while a remote gadget is used to arm and disarm the system To ensure only the authorized user can operate the system the gadget is equipped with a password Various indication outputs such as BUZZER LED and LCD are used to display the alarm status In addition the sound indicators like siren are also included in the design to inform intrusion Due to the consideration of user friendliness portability as well as wider area coverage all the sensors and remote gadget are implemented using zigbee transceiver A backup battery module is also introduced in the design to ensure the system keep functioning even during power failure **Home Automation System Using Arduino System Via IR Sensor** Akashdeep Singh,Varinder Singh,Gagandeep Singh,2018-10-07 This work presents the design and model implementation of a novel home automation system applying the Internet of Things IoT technology It seeks simplified design protocols for developing a robust home automation system to deal with the problems of complexity multiple incompatible standards and the resulting expenses in the existing systems The embedded system featuresthe ubiquitous low cost 32 bit ESP8266 System on chip SoC module interfaced to some sensors and actuators for interaction inthe home Flexibility in the remote access operation and management is achieved through HTML5 based intuitive mobile and web GUI applications Web Application Messaging Protocol WAMP is deployed to ensure that individual applications and systems seamlessly communicate with a relatively high

level of security using robust web service security protocol This system offers a cost effective and efficient solution excluded which are present mostly in other solutions because the costs of a dedicated public IP address and a high end computer are excluded which are present mostly in other solutions **Advanced Home Security System** Ali Abbas,2017

Embark on a transformative journey with Written by is captivating work, Discover the Magic in **Bluetooth Based Home Automation And Security System Using Arm9** . This enlightening ebook, available for download in a convenient PDF format Download in PDF: , invites you to explore a world of boundless knowledge. Unleash your intellectual curiosity and discover the power of words as you dive into this riveting creation. Download now and elevate your reading experience to new heights .

https://py.bijouxmedusa.com/book/detail/default.aspx/technology_comparison_for_entrepreneurs_9_922_wearable_technology.pdf

Table of Contents Bluetooth Based Home Automation And Security System Using Arm9

1. Understanding the eBook Bluetooth Based Home Automation And Security System Using Arm9
    - The Rise of Digital Reading Bluetooth Based Home Automation And Security System Using Arm9
    - Advantages of eBooks Over Traditional Books
2. Identifying Bluetooth Based Home Automation And Security System Using Arm9
    - Exploring Different Genres
    - Considering Fiction vs. Non-Fiction
    - Determining Your Reading Goals
3. Choosing the Right eBook Platform
    - Popular eBook Platforms
    - Features to Look for in an Bluetooth Based Home Automation And Security System Using Arm9
    - User-Friendly Interface
4. Exploring eBook Recommendations from Bluetooth Based Home Automation And Security System Using Arm9
    - Personalized Recommendations
    - Bluetooth Based Home Automation And Security System Using Arm9 User Reviews and Ratings
    - Bluetooth Based Home Automation And Security System Using Arm9 and Bestseller Lists
5. Accessing Bluetooth Based Home Automation And Security System Using Arm9 Free and Paid eBooks
    - Bluetooth Based Home Automation And Security System Using Arm9 Public Domain eBooks

    - Bluetooth Based Home Automation And Security System Using Arm9 eBook Subscription Services
    - Bluetooth Based Home Automation And Security System Using Arm9 Budget-Friendly Options
6. Navigating Bluetooth Based Home Automation And Security System Using Arm9 eBook Formats
    - ePub, PDF, MOBI, and More
    - Bluetooth Based Home Automation And Security System Using Arm9 Compatibility with Devices
    - Bluetooth Based Home Automation And Security System Using Arm9 Enhanced eBook Features
7. Enhancing Your Reading Experience
    - Adjustable Fonts and Text Sizes of Bluetooth Based Home Automation And Security System Using Arm9
    - Highlighting and Note-Taking Bluetooth Based Home Automation And Security System Using Arm9
    - Interactive Elements Bluetooth Based Home Automation And Security System Using Arm9
8. Staying Engaged with Bluetooth Based Home Automation And Security System Using Arm9
    - Joining Online Reading Communities
    - Participating in Virtual Book Clubs
    - Following Authors and Publishers Bluetooth Based Home Automation And Security System Using Arm9
9. Balancing eBooks and Physical Books Bluetooth Based Home Automation And Security System Using Arm9
    - Benefits of a Digital Library
    - Creating a Diverse Reading Collection Bluetooth Based Home Automation And Security System Using Arm9
10. Overcoming Reading Challenges
    - Dealing with Digital Eye Strain
    - Minimizing Distractions
    - Managing Screen Time
11. Cultivating a Reading Routine Bluetooth Based Home Automation And Security System Using Arm9
    - Setting Reading Goals Bluetooth Based Home Automation And Security System Using Arm9
    - Carving Out Dedicated Reading Time
12. Sourcing Reliable Information of Bluetooth Based Home Automation And Security System Using Arm9
    - Fact-Checking eBook Content of Bluetooth Based Home Automation And Security System Using Arm9
    - Distinguishing Credible Sources
13. Promoting Lifelong Learning
    - Utilizing eBooks for Skill Development
    - Exploring Educational eBooks

14. Embracing eBook Trends
    - Integration of Multimedia Elements
    - Interactive and Gamified eBooks

Bluetooth Based Home Automation And Security System Using Arm9 Introduction

Bluetooth Based Home Automation And Security System Using Arm9 Offers over 60,000 free eBooks, including many classics that are in the public domain. Open Library: Provides access to over 1 million free eBooks, including classic literature and contemporary works. Bluetooth Based Home Automation And Security System Using Arm9 Offers a vast collection of books, some of which are available for free as PDF downloads, particularly older books in the public domain. Bluetooth Based Home Automation And Security System Using Arm9 : This website hosts a vast collection of scientific articles, books, and textbooks. While it operates in a legal gray area due to copyright issues, its a popular resource for finding various publications. Internet Archive for Bluetooth Based Home Automation And Security System Using Arm9 : Has an extensive collection of digital content, including books, articles, videos, and more. It has a massive library of free downloadable books. Free-eBooks Bluetooth Based Home Automation And Security System Using Arm9 Offers a diverse range of free eBooks across various genres. Bluetooth Based Home Automation And Security System Using Arm9 Focuses mainly on educational books, textbooks, and business books. It offers free PDF downloads for educational purposes. Bluetooth Based Home Automation And Security System Using Arm9 Provides a large selection of free eBooks in different genres, which are available for download in various formats, including PDF. Finding specific Bluetooth Based Home Automation And Security System Using Arm9, especially related to Bluetooth Based Home Automation And Security System Using Arm9, might be challenging as theyre often artistic creations rather than practical blueprints. However, you can explore the following steps to search for or create your own Online Searches: Look for websites, forums, or blogs dedicated to Bluetooth Based Home Automation And Security System Using Arm9, Sometimes enthusiasts share their designs or concepts in PDF format. Books and Magazines Some Bluetooth Based Home Automation And Security System Using Arm9 books or magazines might include. Look for these in online stores or libraries. Remember that while Bluetooth Based Home Automation And Security System Using Arm9, sharing copyrighted material without permission is not legal. Always ensure youre either creating your own or obtaining them from legitimate sources that allow sharing and downloading. Library Check if your local library offers eBook lending services. Many libraries have digital catalogs where you can borrow Bluetooth Based Home Automation And Security System Using Arm9 eBooks for free, including popular titles.Online Retailers: Websites like Amazon, Google Books, or Apple Books often sell eBooks. Sometimes, authors or publishers offer promotions or free periods for certain books.Authors Website Occasionally, authors provide excerpts or short stories for free on their websites. While this might not be the Bluetooth Based

Home Automation And Security System Using Arm9 full book , it can give you a taste of the authors writing style.Subscription Services Platforms like Kindle Unlimited or Scribd offer subscription-based access to a wide range of Bluetooth Based Home Automation And Security System Using Arm9 eBooks, including some popular titles.

FAQs About Bluetooth Based Home Automation And Security System Using Arm9 Books

How do I know which eBook platform is the best for me? Finding the best eBook platform depends on your reading preferences and device compatibility. Research different platforms, read user reviews, and explore their features before making a choice. Are free eBooks of good quality? Yes, many reputable platforms offer high-quality free eBooks, including classics and public domain works. However, make sure to verify the source to ensure the eBook credibility. Can I read eBooks without an eReader? Absolutely! Most eBook platforms offer web-based readers or mobile apps that allow you to read eBooks on your computer, tablet, or smartphone. How do I avoid digital eye strain while reading eBooks? To prevent digital eye strain, take regular breaks, adjust the font size and background color, and ensure proper lighting while reading eBooks. What the advantage of interactive eBooks? Interactive eBooks incorporate multimedia elements, quizzes, and activities, enhancing the reader engagement and providing a more immersive learning experience. Bluetooth Based Home Automation And Security System Using Arm9 is one of the best book in our library for free trial. We provide copy of Bluetooth Based Home Automation And Security System Using Arm9 in digital format, so the resources that you find are reliable. There are also many Ebooks of related with Bluetooth Based Home Automation And Security System Using Arm9. Where to download Bluetooth Based Home Automation And Security System Using Arm9 online for free? Are you looking for Bluetooth Based Home Automation And Security System Using Arm9 PDF? This is definitely going to save you time and cash in something you should think about.

Find Bluetooth Based Home Automation And Security System Using Arm9 :

technology comparison for entrepreneurs 9-922 wearable technology
sustainable living comparison for small business 9-1666 sustainable
tools for small business 9-1438 small business ideas trends America
United States 9-1556 VPN services tutorial for creators 9-1200 VPN
growth guide for entrepreneurs 9-364 career growth ideas USA 9-667
development trends for entrepreneurs 9-245 chatbot development tutorial

score improvement blueprint America 9-429 credit score improvement America 9-1085 freelancing online examples America 9-2895 freelancing *finance for beginners for entrepreneurs 9-248 personal finance guide* for startups 9-690 coding for beginners comparison America 9-2024 coding *step for startups 9-2619 blog monetization strategies for creators* **development trends United States 9-2543 blog monetization apps USA** *app ideas strategies USA 9-305 mobile app ideas tips America 9-2927* **United States 9-2115 fitness routines review for startups 9-1602 fitness estate investing tools for startups 9-1132 real estate investing trends**

Bluetooth Based Home Automation And Security System Using Arm9 :

The 7 Secrets of World Class Athletes by Yellin, Steven Great book about controlling your brain thought process to become a great athlete in any sport including golf. The only issue I had with the book is it ... The 7 Secrets of World Class Athletes by Steven Yellin ... This is a brilliant book. It ties together much of what I've surmised about superior performance and what contributes to it. In addition, the book also sheds ... The 7 Secrets of World Class Athletes The 7 Secrets of World Class Athletes takes you into the minds of super-star athletes when they are on top of their game. The fascinating concept is that ... The 7 Secrets of World Class Athletes The 7 Secrets of World Class Athletes takes you into the minds of super-star athletes when they are on top of their game. The fascinating concept is that. The 7 Secrets of World Class Athletes - Yellin, Steven The 7 Secrets of World Class Athletes takes you into the minds of super-star athletes when they are on top of their game. The fascinating concept is that ... The 7 Secrets of World Class Athletes The 7 Secrets of World Class Athletes takes you into the minds of super-star athletes when they are on top of their game. The fascinating concept is that ... The 7 Secrets of World Class Athletes, Biancalana, Budd Author:Biancalana, Buddy. The 7 Secrets of World Class Athletes. Book Binding:Paperback / softback. Book Condition:GOOD. Year Published:0630. The 7 secrets of world class athletes : Yellin, Steven, author Apr 14, 2021 — 192 pages ; 21 cm. First secret: The fluid motion factor -- Second secret: Sports as a series of gaps -- Third secret: The quality of the ... The 7 Secrets of World Class Athletes Synopsis: The 7 Secrets of World Class Athletes takes you into the minds of super-star athletes when they are on top of their game. The fascinating concept is ... The 7 Secrets of World Class Athletes by Buddy Biancalana The 7 Secrets of World Class Athletes by Buddy Biancalana: New ; Item Number. 363415436080 ; Publication Date. 2010-06-30 ; Pages. 198 ; Accurate description. 4.9. Anatomy & Physiology (Seely's Anatomy &... by ... Anatomy & Physiology (Seely's Anatomy & Physiology Ninth Edition) [Cinnamon VanPutte, Jennifer L. Regan, Andrew F. Russo] on Amazon.com. seeleys-essentials-of-anatomy-and-physiology- ... For each of us, authoring this text

is a culmination of our passion for teaching and represents an opportunity to pass knowledge on to students beyond our own ... Seeley's Essentials of Anatomy and Physiology: ... Seeley's Essentials of Anatomy and Physiology. 9th Edition. ISBN-13: 978-0078097324, ISBN-10: 0078097320. 4.6 4.6 out of 5 stars 69 Reviews. 4.2 on Goodreads. (... Seeleys Essentials of Anatomy and Physiology 9th Edition Seeleys Essentials of Anatomy and Physiology 9th Edition. seeleys anatomy physiology 9th edition - AbeBooks Seeley's Anatomy & Physiology, 9th edition by Vanputte, Cinnamon, Regan, Jennifer, Russo, Andrew and a great selection of related books, ... Seeley's Anatomy & Physiology, 9th edition This text is designed to help students develop a solid, basic understanding of anatomy and physiology without an encyclopedic presentation of detail. Seeley S Anatomy And Physiology for sale Seeley's Essentials Of Anatomy & Physiology 9th Edition Russo Regan Book. Pre-Owned. Seeley's Anatomy & Physiology | Rent | 9780077350031 Seeley's Anatomy & Physiology9th edition ; Edition: 9th edition ; ISBN-13: 978-0077350031 ; Format: Hardback ; Publisher: McGraw-Hill Science/Engineering/Math (1/5/ ... Seeley's Anatomy and Physiology 9th Edition This text is designed to help students develop a solid, basic understanding of anatomy and physiology without an encyclopedic presentation of detail. Seeley's Essentials of Anatomy and Physiology Buy Seeley's Essentials of Anatomy and Physiology 9th edition (9780078097324) by Cinnamon Vanputte for up to 90% off at Textbooks.com. Sample test questions IELTS sample test questions. Official practice and sample questions and answers. We have a range of materials to help you do well in your IELTS test. Free online IELTS Academic Reading practice test - paper Practise for your IELTS Academic Reading exam with this free online IELTS Reading practice test with answers. IELTS Sample Questions with Answers This section gives sample questions from original IELTS tests with model answers. As part of your IELTS preparation, you should practice the IELTS Sample ... IELTS Reading Practice Tests You can find here plenty of free IELTS Reading test samples to help you in IELTS Reading practice ... Read the text and answer the questions. Then press "check" ... IELTS Listening Practice Test 2023 with Answers [Real Exam Free online IELTS practice tests Our free online IELTS practice tests with answers will help improve your listening, reading, writing and speaking IELTS exam performance. IELTS Reading Practice Tests (Academic Module) In this article, you'll find the 55 IELTS academic reading practice test pdf which contains passages, questions, and answers. IELTS Reading Practice Tests 2023 - Reading Passages ... Complete reading all the 3 passages and answer all the questions. Look at the 'Answers' section to check the scores obtained in the reading test. IELTS Reading ... IELTS Reading Lessons & Exercises Learn how to answer sentence completion questions on IELTS. Look at the tips and strategy, and see an example with detailed explanations. Lesson 4 : matching ...